Composite Vertical Fenceing Installation Guide

(Flat Fencing UH24)
(European Fencing UH66)
(Hybrid Fencing UH105)

11.11.25 US

NewTechWood®

BZ10307

Content

Important Note	3
Exploded View & Parts List	4-9
Step 1: Post Installation	
• Measuring and Positioning	10
• Setting the Posts	10-13
Step 2: Bottom Trim and Spring Wedge Installation	
• Bracket Installation	14
• Bottom Trim Installation	14
• Spring Wedge Installation	15
Step 3: Fence Boards Installation	16
• Flat Fencing UH24	17-19
• European Fencing UH66	20-22
• Hybrid Fencing UH105	23-25
Step 4: Top Trim and Post Cap Installation	26-27

Important Note

Read All Sections Before You Start

For the latest information, please visit our website @ www.newtechwood.com

Prior to installing any composite product, it is recommended that you check with local building codes for any special requirement or restrictions. The diagrams and instructions outlined in this guide are for illustration purpose only and are not meant or implied to replace a licensed professional. Any construction or use of NewTechWood products must be in accordance with all local zoning and/or building codes. The consumer assumes all risks and liability associated with the construction and use of this product.

Safety

When dealing with any type of construction project, it is necessary to wear appropriate safety equipment to avoid any injuries. NewTechWood recommends the following safety equipment when handling, cutting, and installing NewTechWood products: gloves, respiratory protection, long sleeves, pants, shoes and safety glasses.

Tools

Please select the appropriate tools for installation.

Environment

A clean, smooth, flat, and strong surface is needed for the proper installation of NewTechWood products. Always check with local building codes before installing any type of product. If installation does not occur immediately. NewTechWood products need to be put on a flat surface at all times.

Planning

Plan a layout for your fencing before starting to ensure the best possible looking fencing for your project. We recommend drawing out a site plan of the proposed project to minimize errors and make the prefect fencing.

Assembly

Before installation, check the parts in the package box via the parts list on pages 5-9. If any are missing, contact the dealer from whom you purchased this product to obtain the missing parts.

Exploded View
Flat Fencing UH24

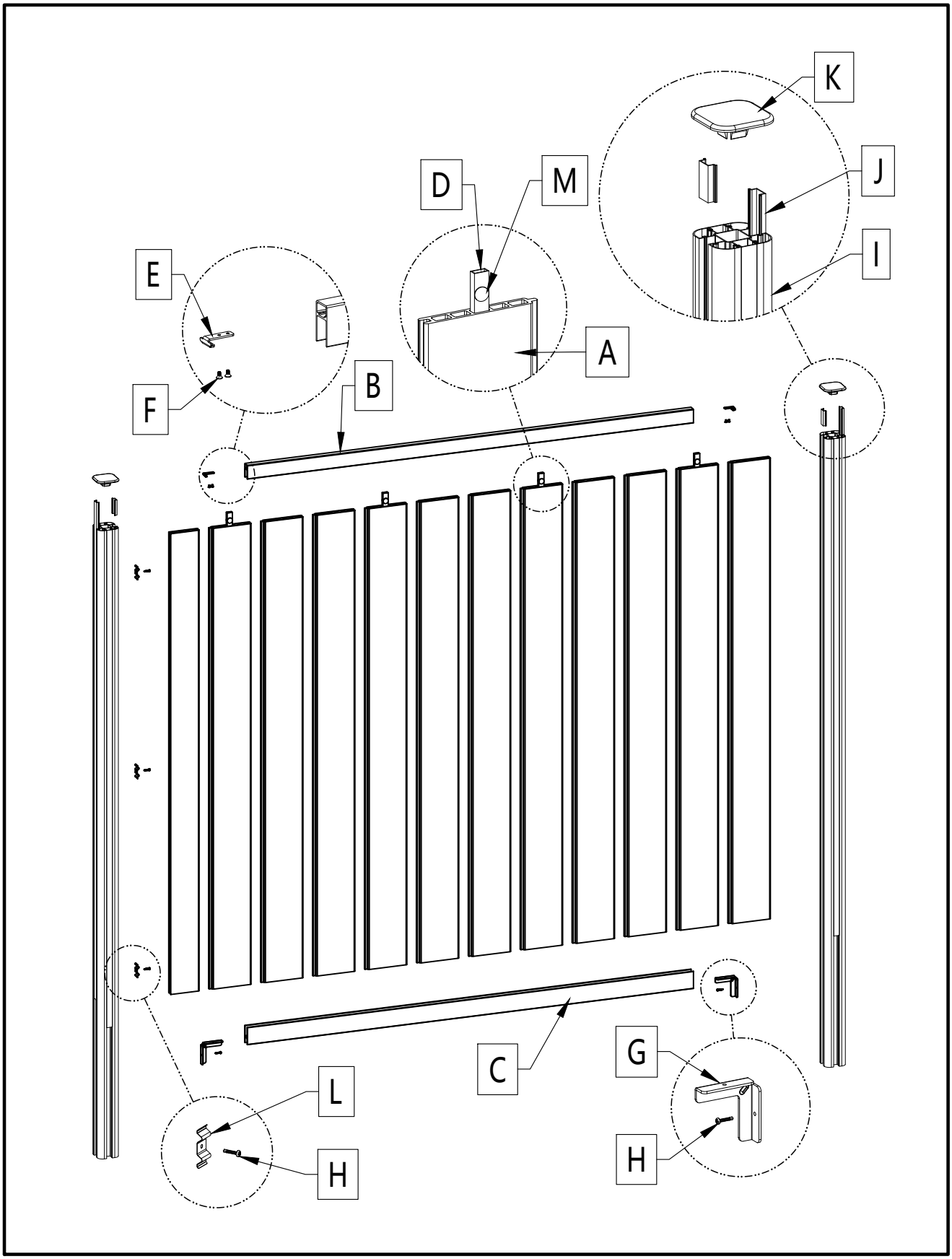

Parts List
Flat Fencing UH24

Code		Qty	Description
A	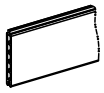	x12	Fence Board
B		x1	Aluminum Top Trim
C		x1	Aluminum Bottom Trim
D		x4	Galvanized Steel Tube
E		x2	Top Trim Bracket
F		x4	Screw
G		x2	Bottom Trim Bracket
H		x5	Screw
I		x2	Post: FN0213R-2400
J		x8	Post Trim
K		x2	Post Cap
L		x3	Spring Wedge
M		x16	Rubber Pad

Exploded View
European Fencing UH66

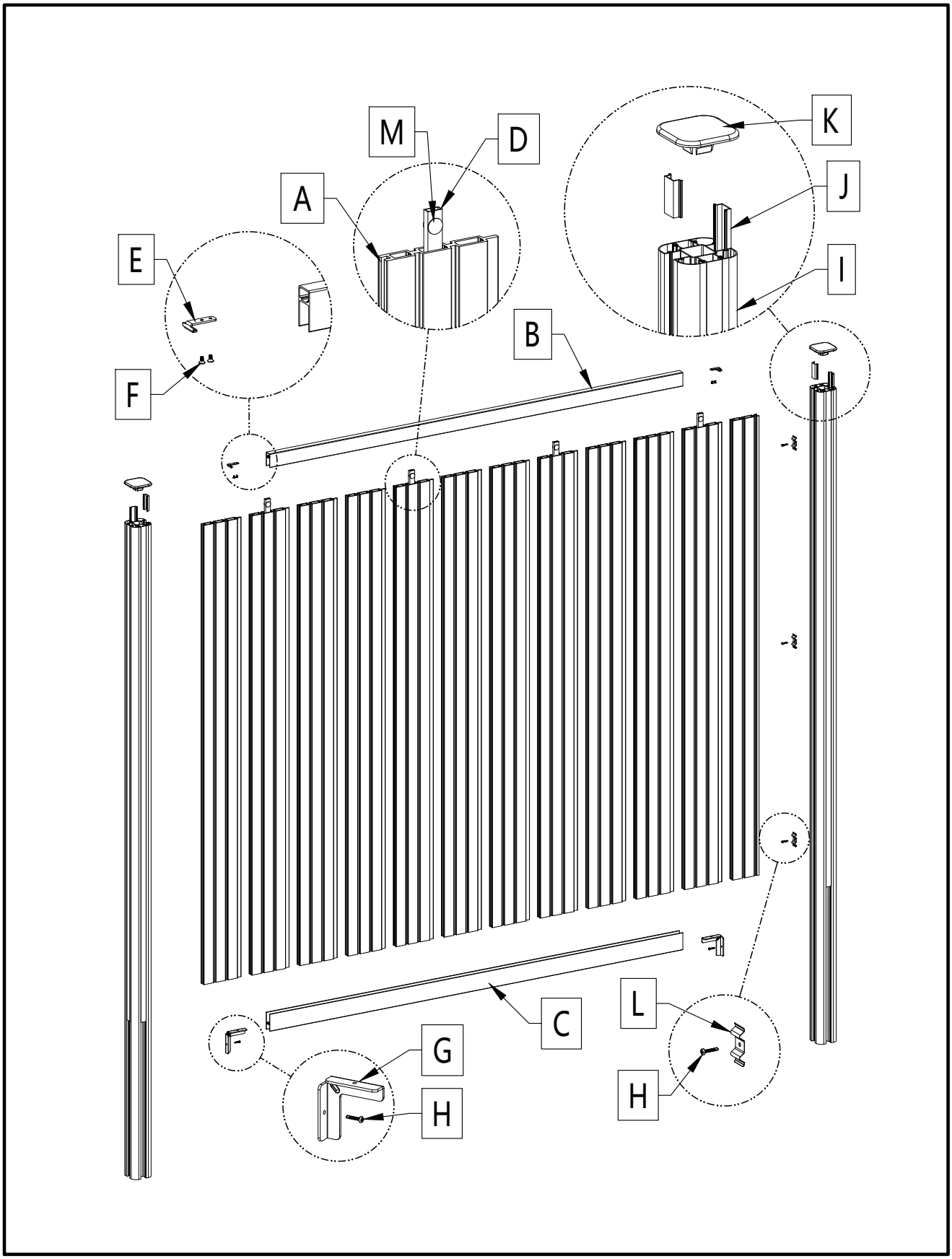

Parts List
European Fencing UH66

Code		Qty	Description
A		x12	Fence Board
B		x1	Aluminum Ending Trim
C		x1	Aluminum Starting Trim
D		x4	Galvanized Steel Tube
E		x2	Clip for Ending Trim
F		x4	Screw
G		x2	Bottom Trim Bracket
H		x5	Screw
I	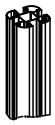	x2	Post: FN0213R-2400
J		x8	Post Trim
K		x2	Post Cap
L		x3	Spring Wedge
M		x16	Rubber Pad

Exploded View
Hybrid Fencing UH105

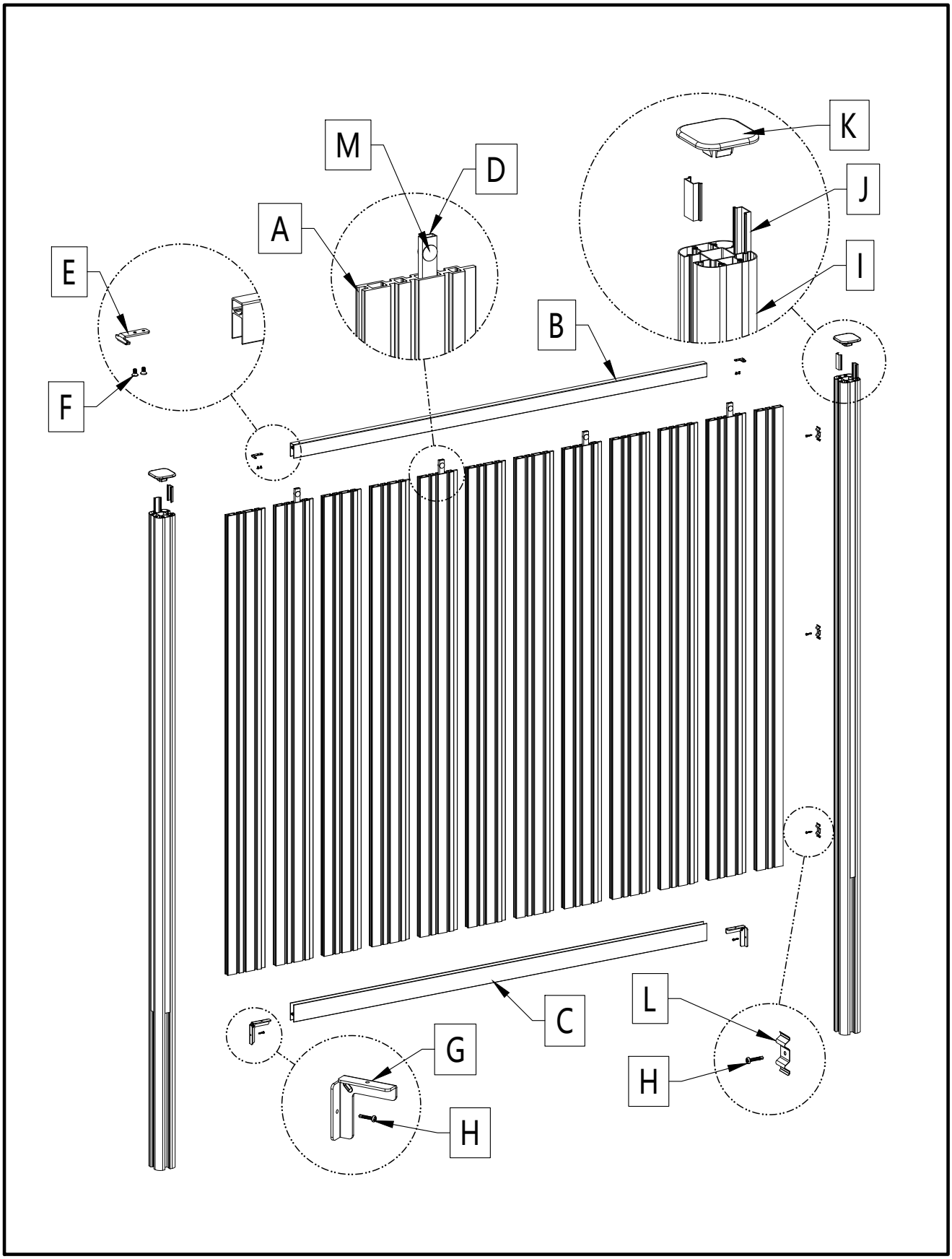

Parts List
Hybrid Fencing UH105

Code		Qty	Description
A		x12	Fence Board
B		x1	Aluminum Top Trim
C		x1	Aluminum Bottom Trim
D		x4	Galvanized Steel Tube
E		x2	Top Trim Bracket
F		x4	Screw
G		x2	Bottom Trim Bracket
H		x5	Screw
I	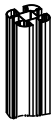	x2	Post: FN0213R-2400
J		x8	Post Trim
K		x2	Post Cap
L		x3	Spring Wedge
M		x16	Rubber Pad

Step 1: Post (#I) Installation

1.1 Measure and position the gate post on the ground. Draw a positioning mark for the fixed center positions, as shown in *Diagram 1.1*.

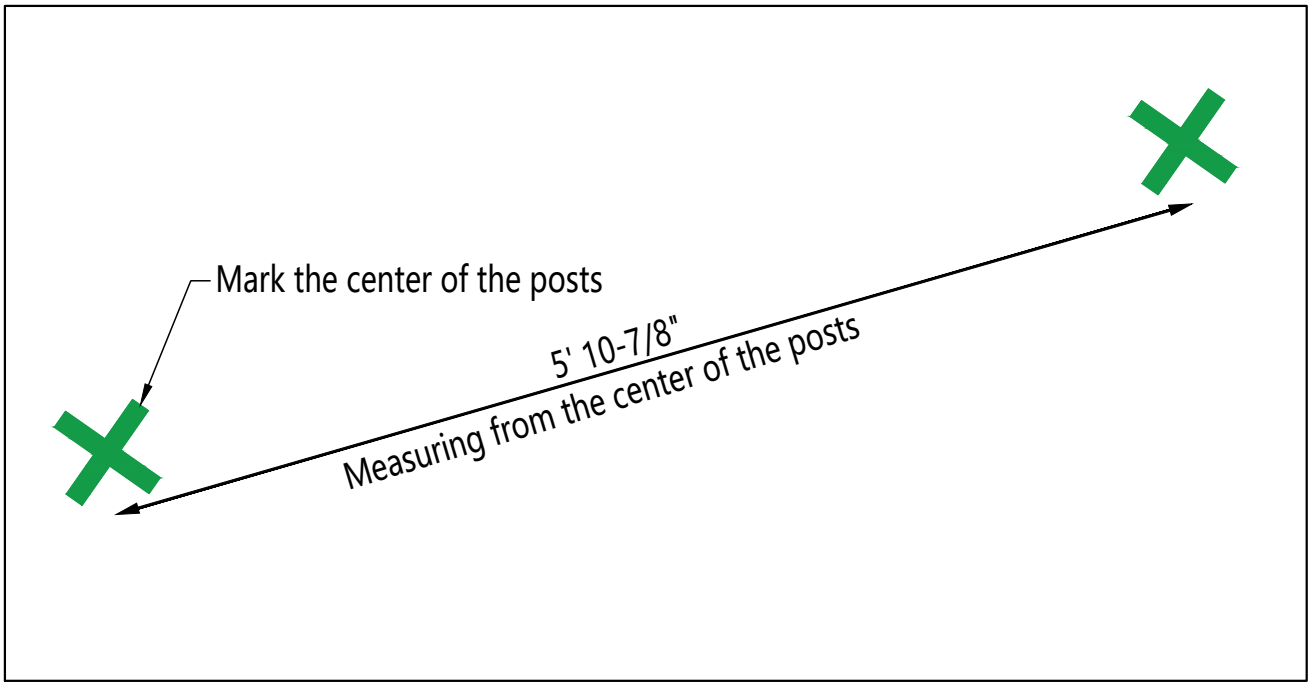

Diagram 1.1

1.2 Dig a 25-5/16" deep hole, approximately one-third the height of the gate post, at the positioning mark. The diameter of the hole should be ϕ9-7/16", three times the width of the posts.

Please Note:
In colder climates regions, digging will need to pass the frost line. Check online for the frost line in your area or contact your local building authority for advice.

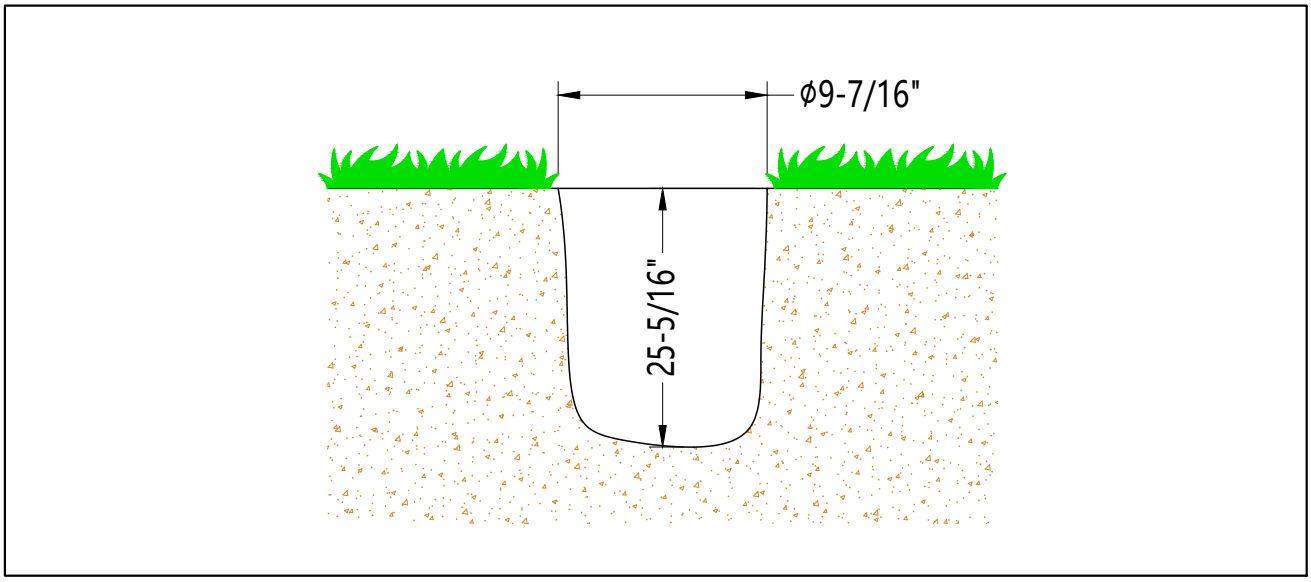

Diagram 1.2

1.3 Lay 6" of gravel at the bottom of the hole to allow for proper water drainage, as shown in *Diagram 1.3*.

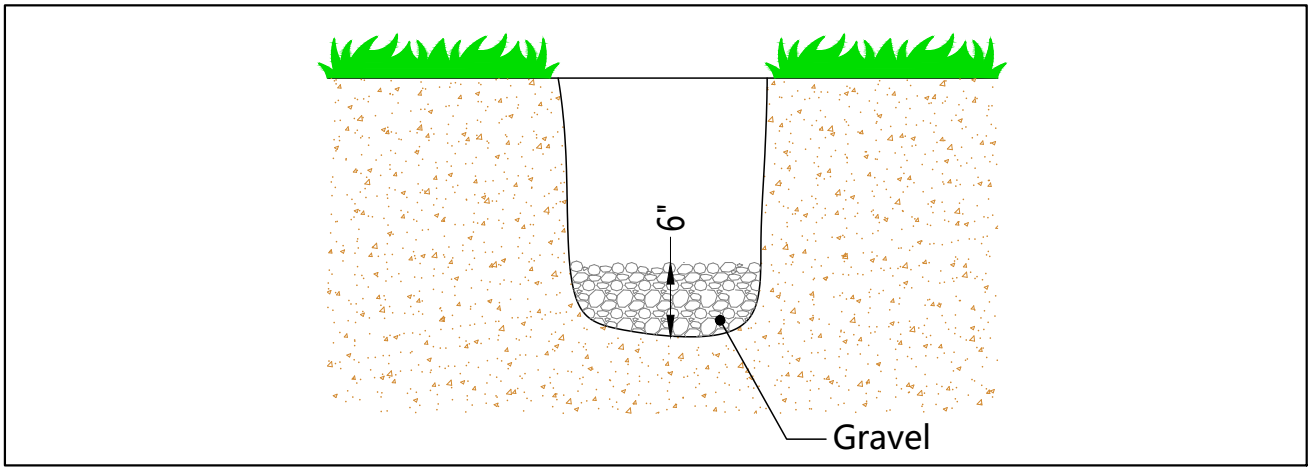

Diagram 1.3

1.4 Place the Fence Post in the middle of the gravel and ensure they are plumb. The distance from the post top and the ground should be 74-13/16", as shown in *Diagram 1.4*.

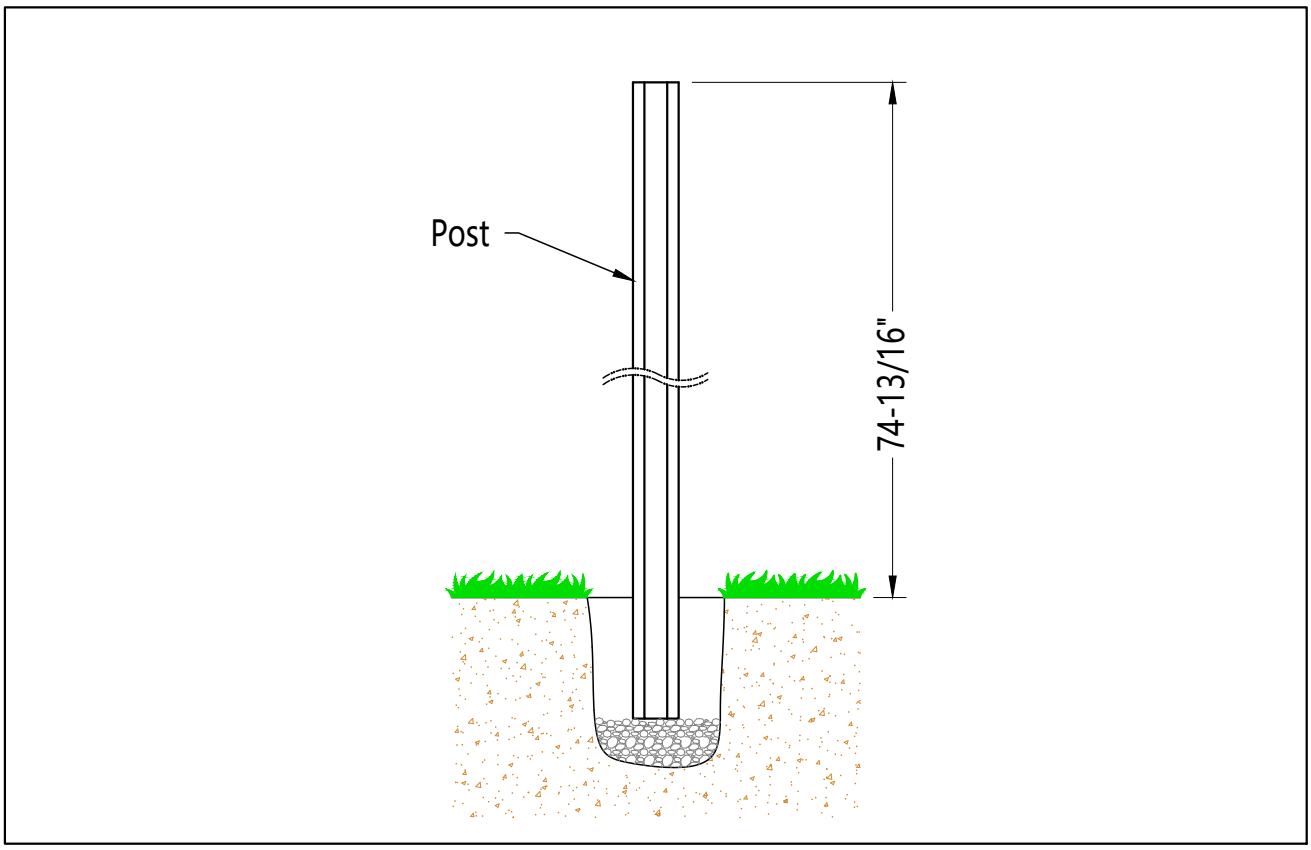

Diagram 1.4

1.5 Pour concrete into the hole until it reaches 2" below ground, as shown in *Diagram 1.5.1* and *1.5.2* .

Note: 1. Be sure to pour concrete evenly around the posts.
2. Ensure the fence posts are plumb and in level before the concrete sets

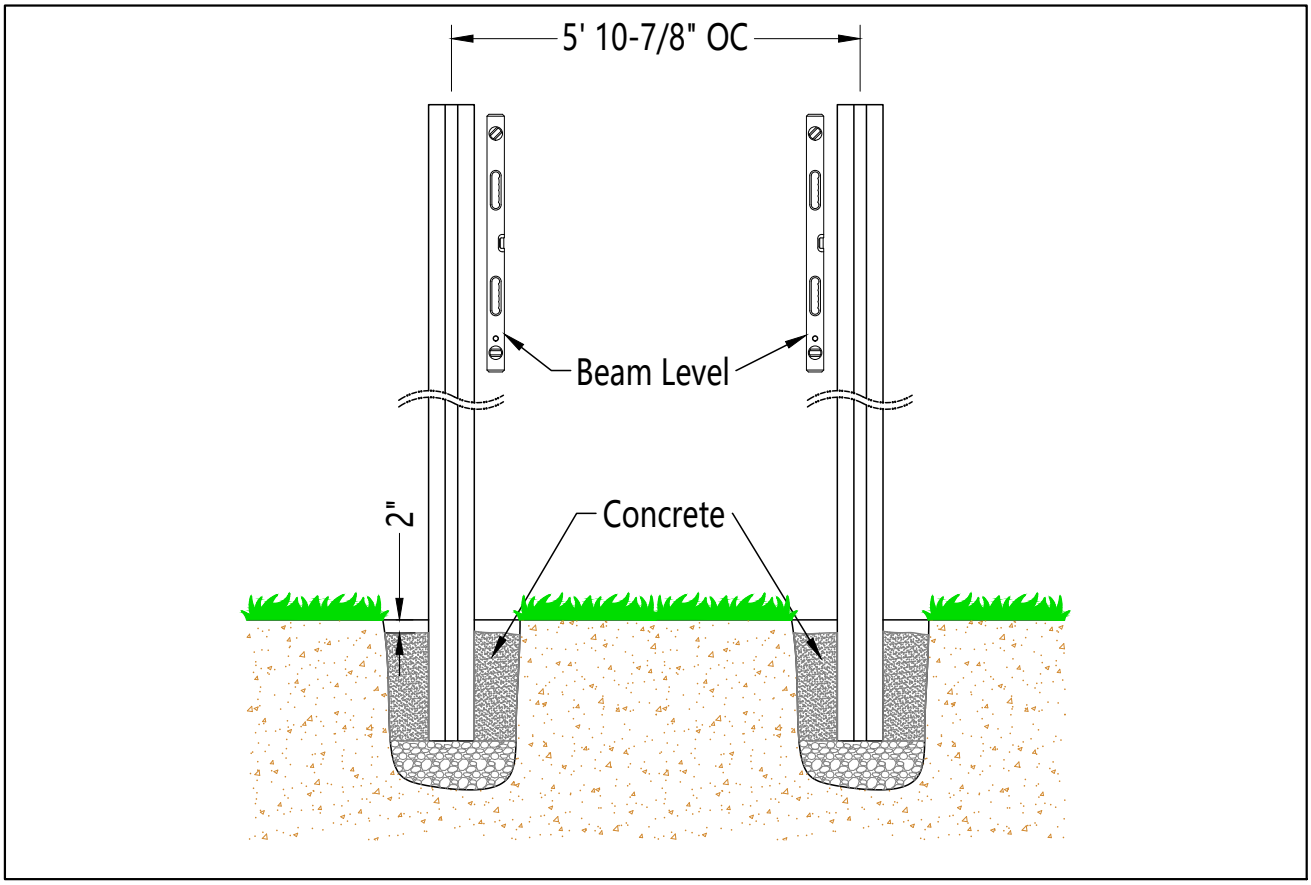

Diagram 1.5.1

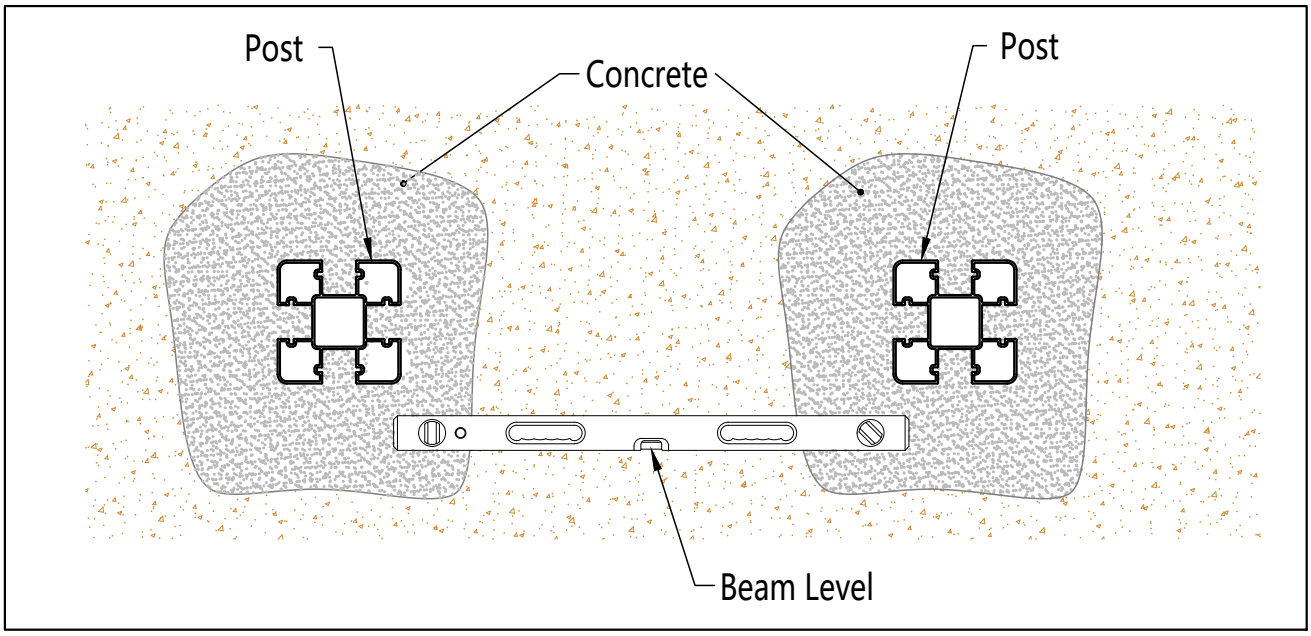

Diagram 1.5.2

1.6 Fill the top with dirt when the concrete has set and hardened, as shown in *Diagram 1.6*.

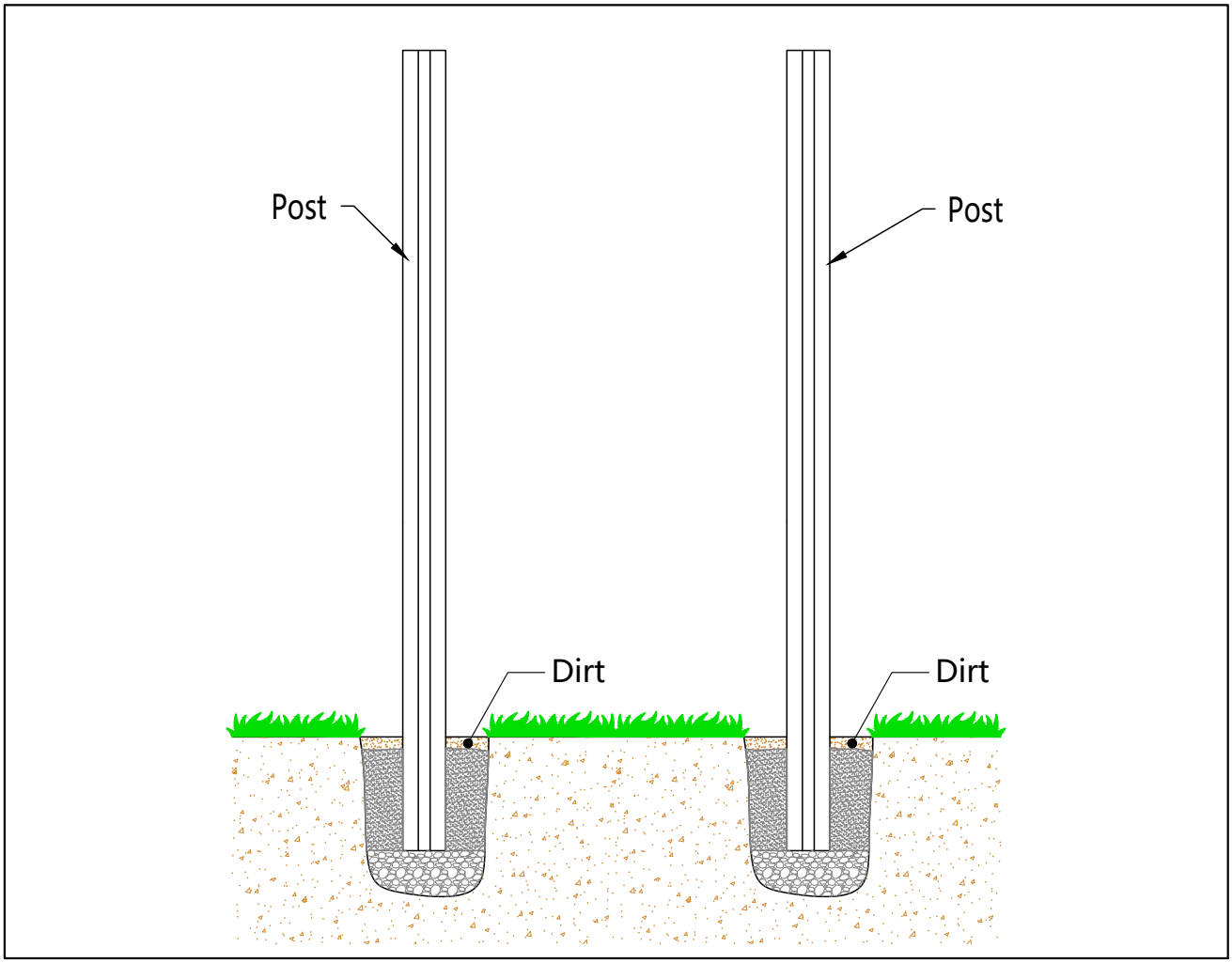

Diagram 1.6

Step 2: Bottom Trim (#C) and Spring Wedge (#L) Installation

2.1 Secure the Bottom Trim Bracket (#G) with Screws (#H) on the post, as shown in *Diagram 2.1*.

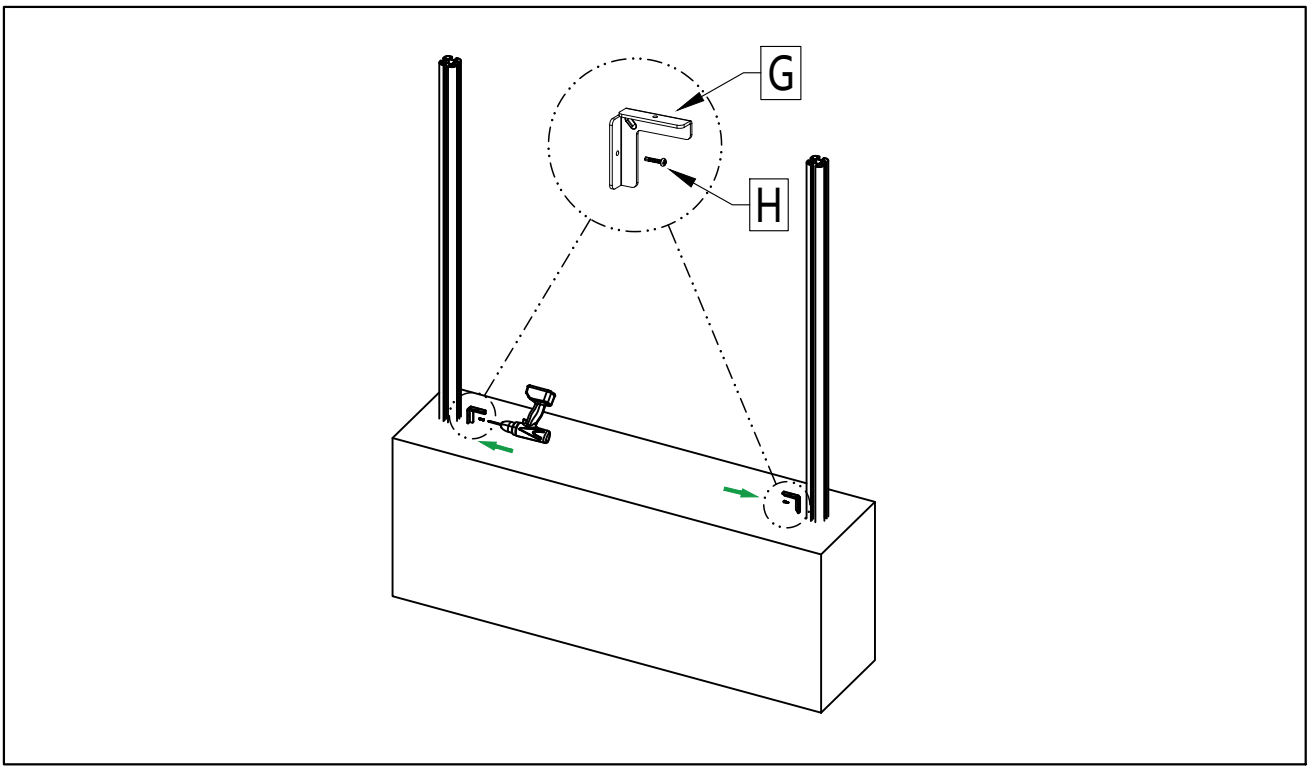

Diagram 7

2.2 Put the Bottom Trim (#C) over the Bottom Trim Bracket (#G), as shown in *Diagram 2.2*.

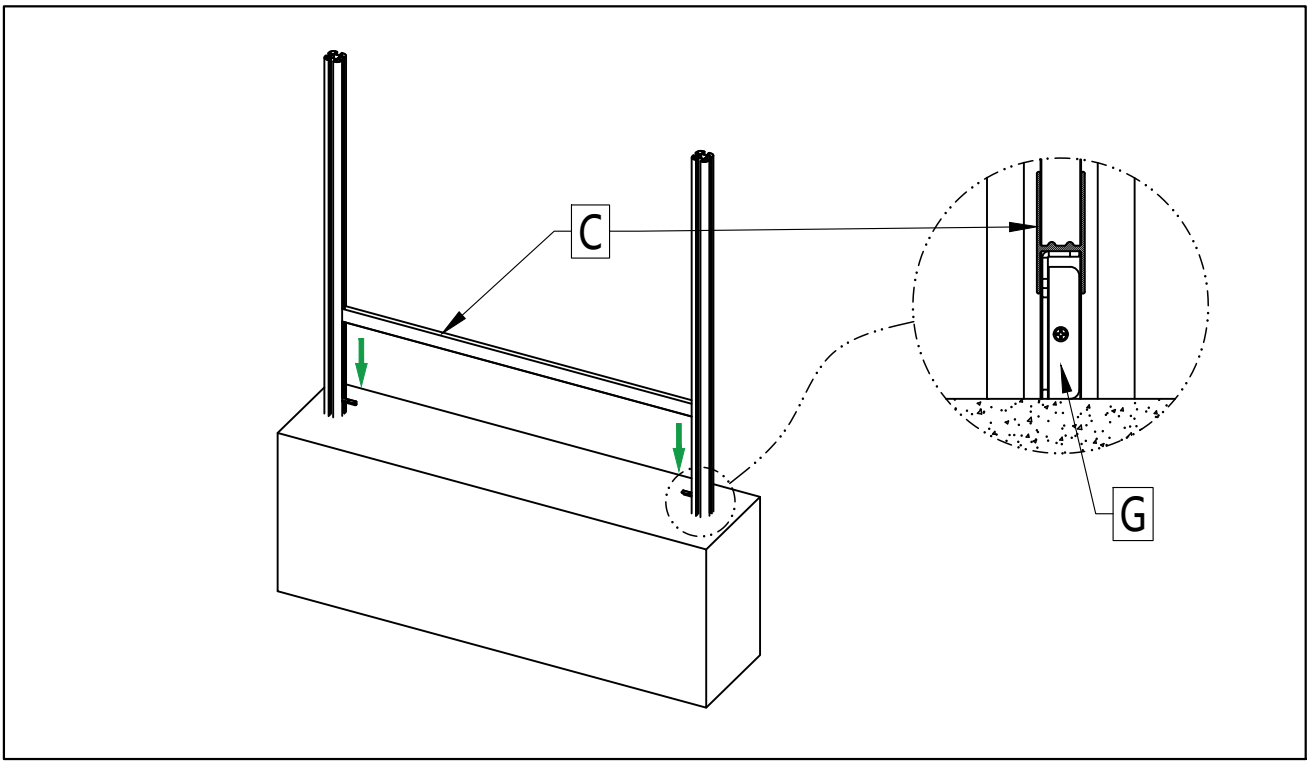

Diagram 8

2.3 Secure the Spring Wedges (#L) with Screws (#H) on the post, as shown in *Diagram 2.3.1*

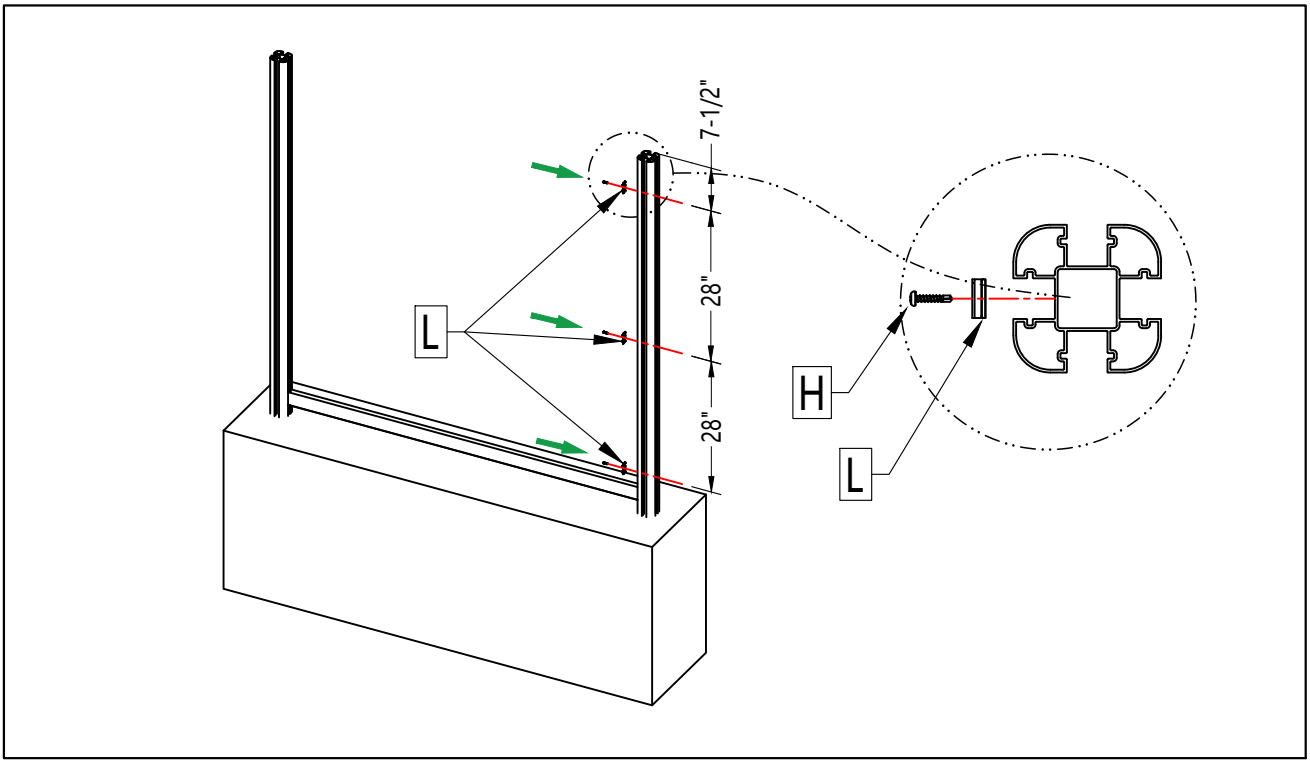

Diagram 2.3.1

Please Note:
Only fasten the Spring Wedge (#L) on one side of the post, as shown in *Diagram 2.3.2*

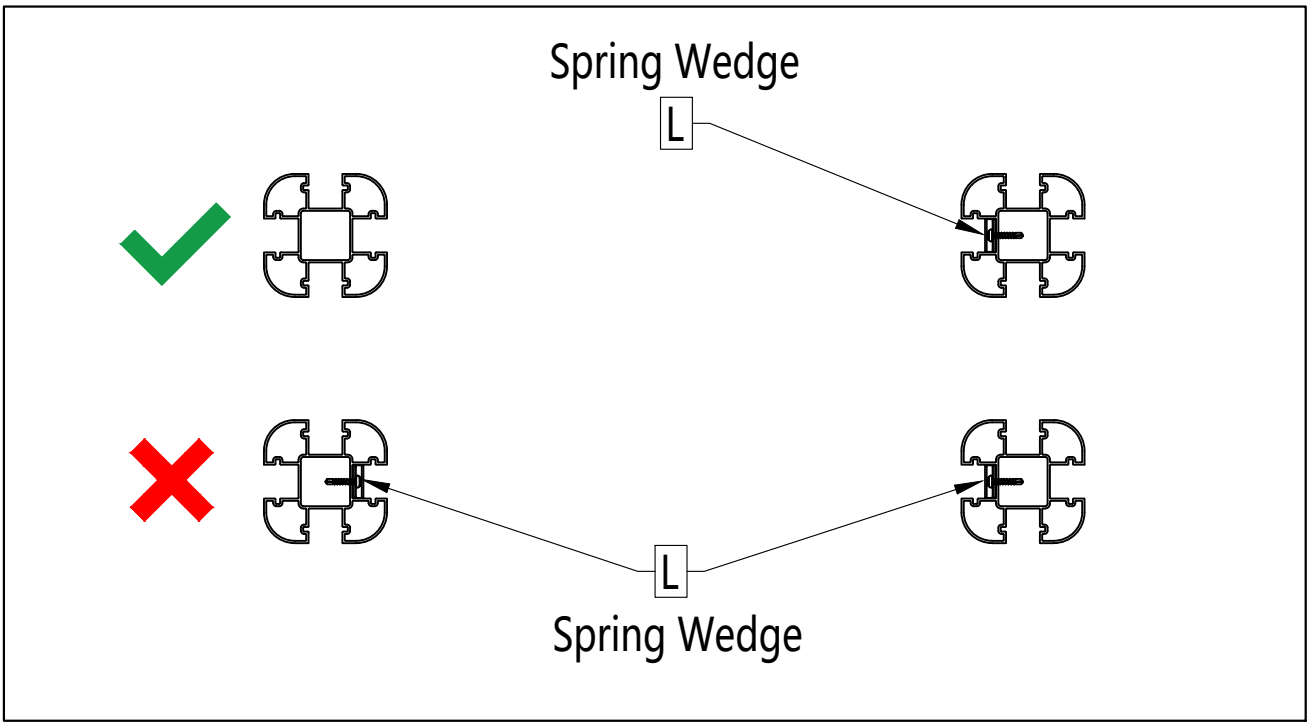

Diagram 2.3.2

Step 3: Fence Boards Installation

Please Note:
Start with the post with no spring wedge's. Then work towards the post with the Spring Wedge (L), as shown in the diagram below.

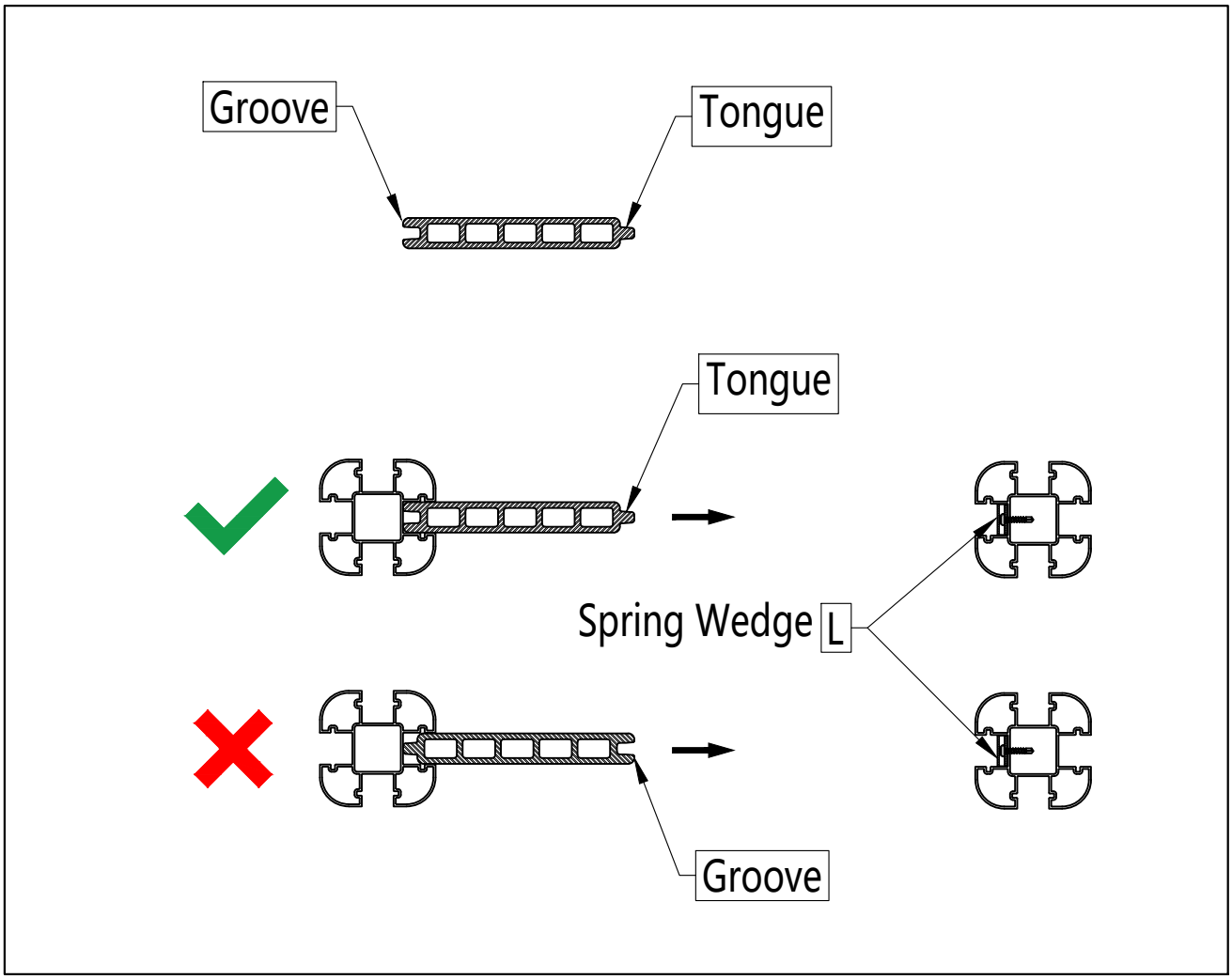

Flat Fencing UH24

3.1.1 Stick the Rubber Pad (#M) on the two sides of the Galvanized Steel Tube's ends (#D) and insert it inside the fence boards in order, as shown in *Diagram 3.1.1*.

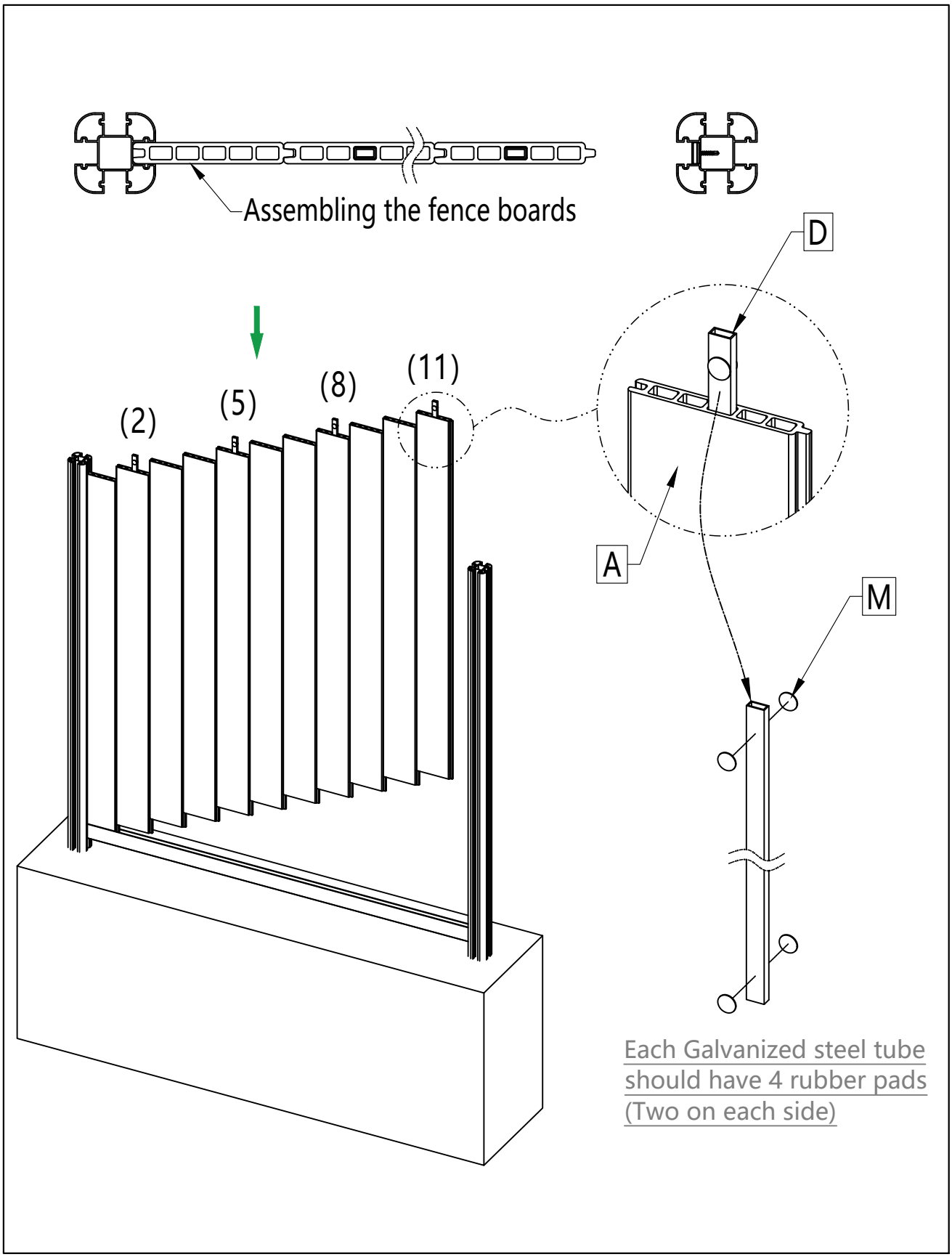

Diagram 3.1.1

Flat Fencing UH24

3.1.2 Measure the space between the second to last fence board and the Spring Wedge (#L), as shown in *Diagram 3.1.2*.

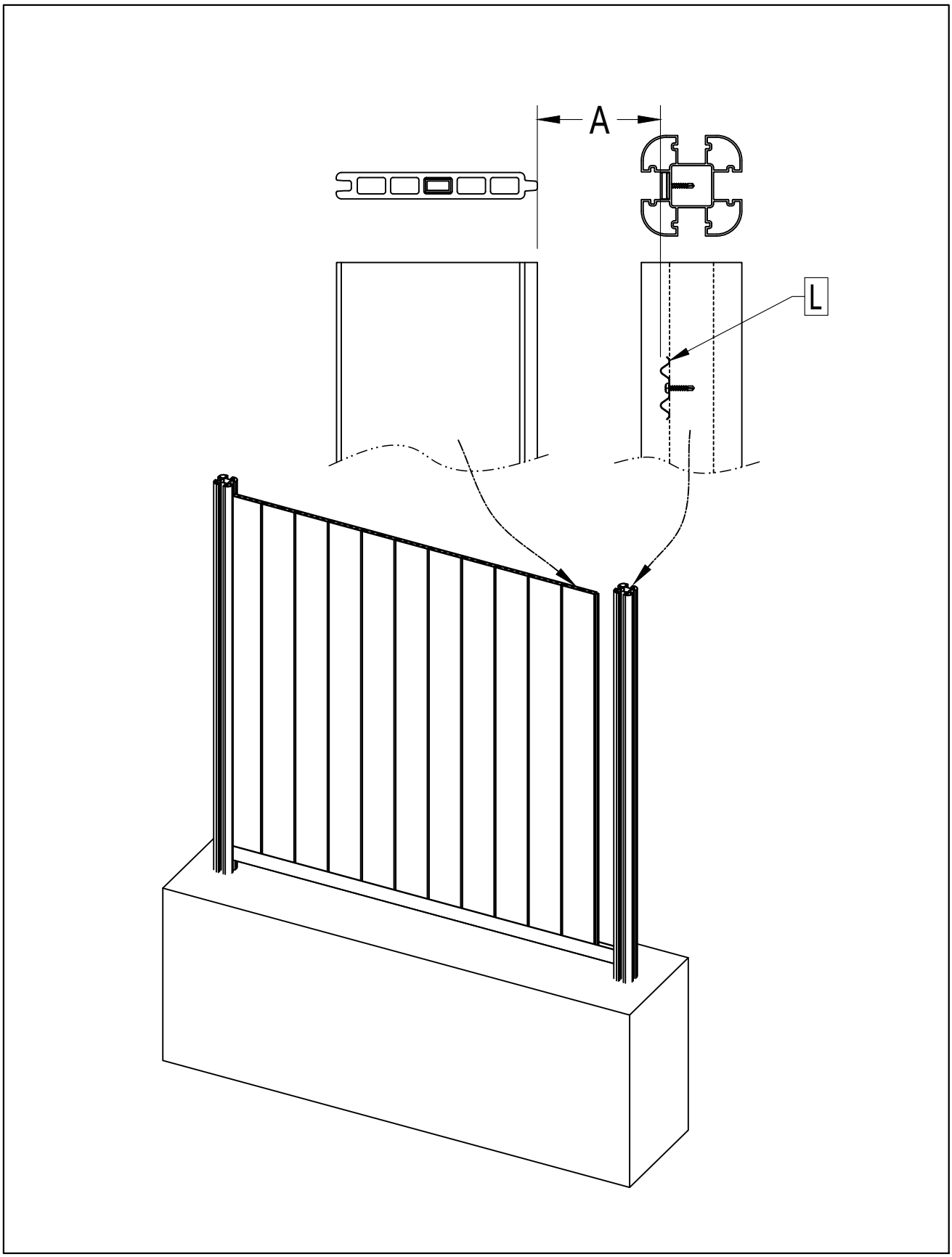

Diagram 3.1.2

3.1.3 Cut the last fence board with the measurement plus 1/2". Use a plastic mallet with a board to blunt the force to slot the last board into the post, as shown in *Diagram 3.1.3*.

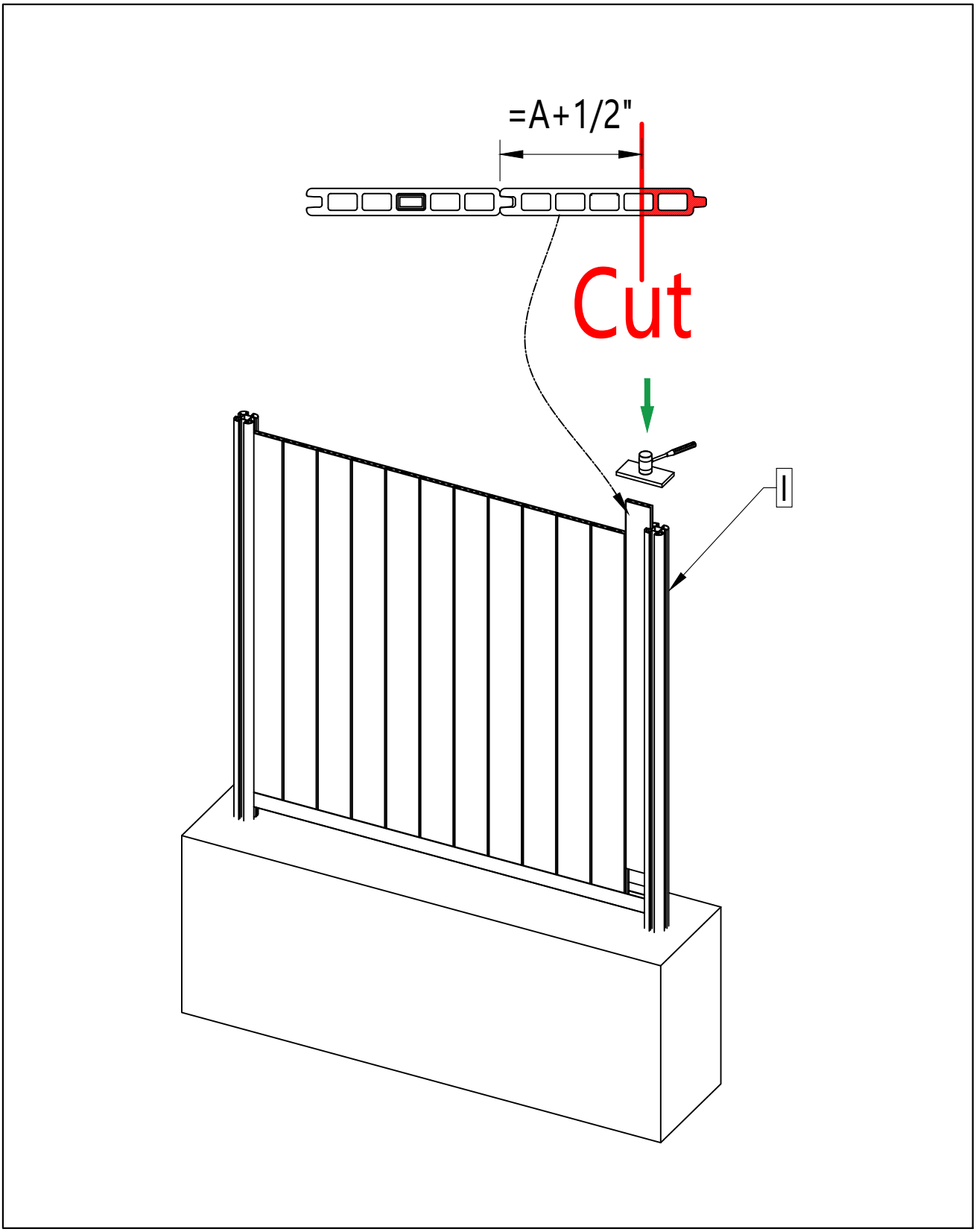

Diagram 3.1.3

3.2.1 Stick the Rubber Pad (#M) on the two sides of the Galvanized Steel Tube's ends (#D) and insert it inside the fence boards in order, as shown in *Diagram 3.2.1*.

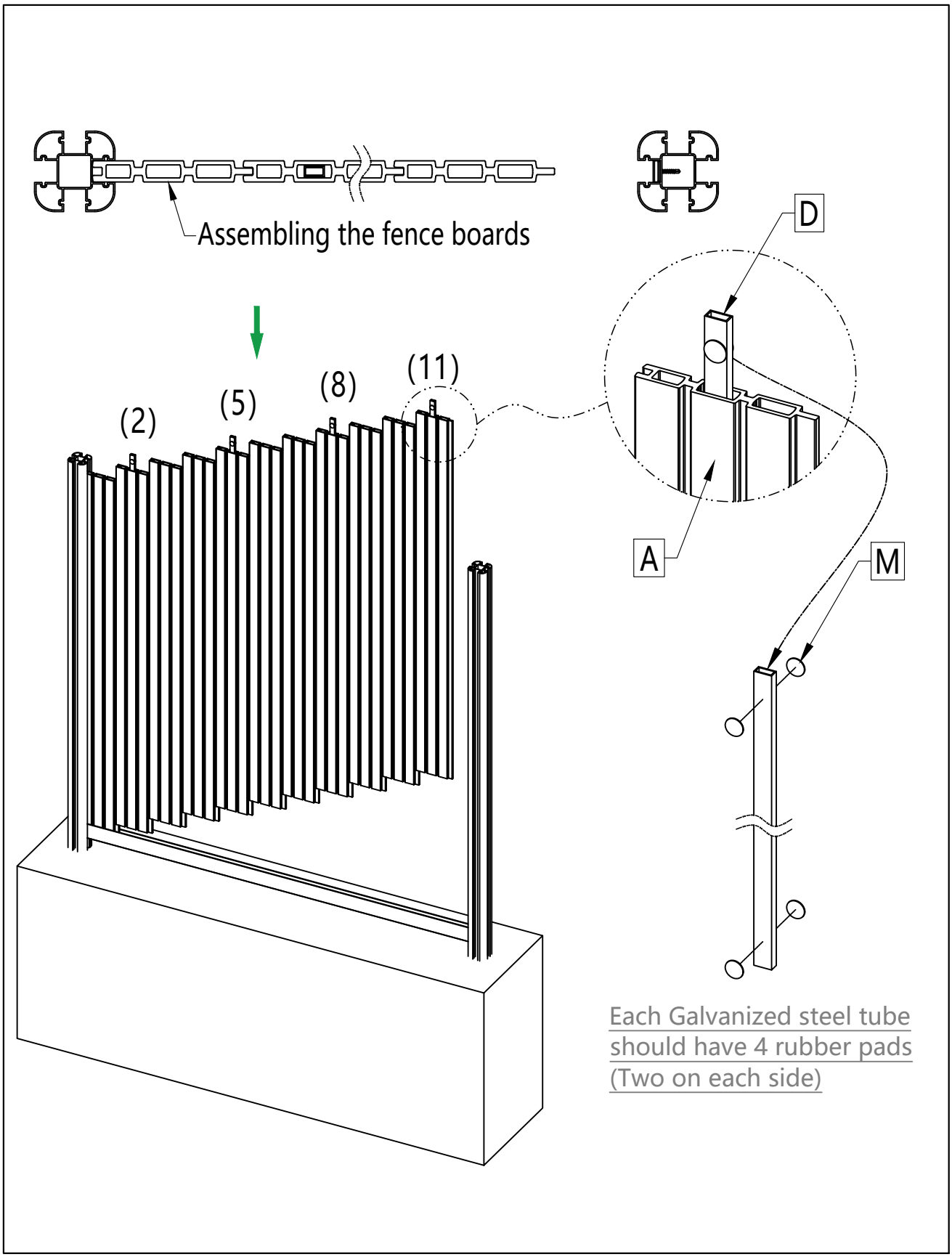

Diagram 3.2.1

3.2.2 Measure the space between the second to last fence board and the Spring Wedge (#L), as shown in *Diagram 3.2.2*.

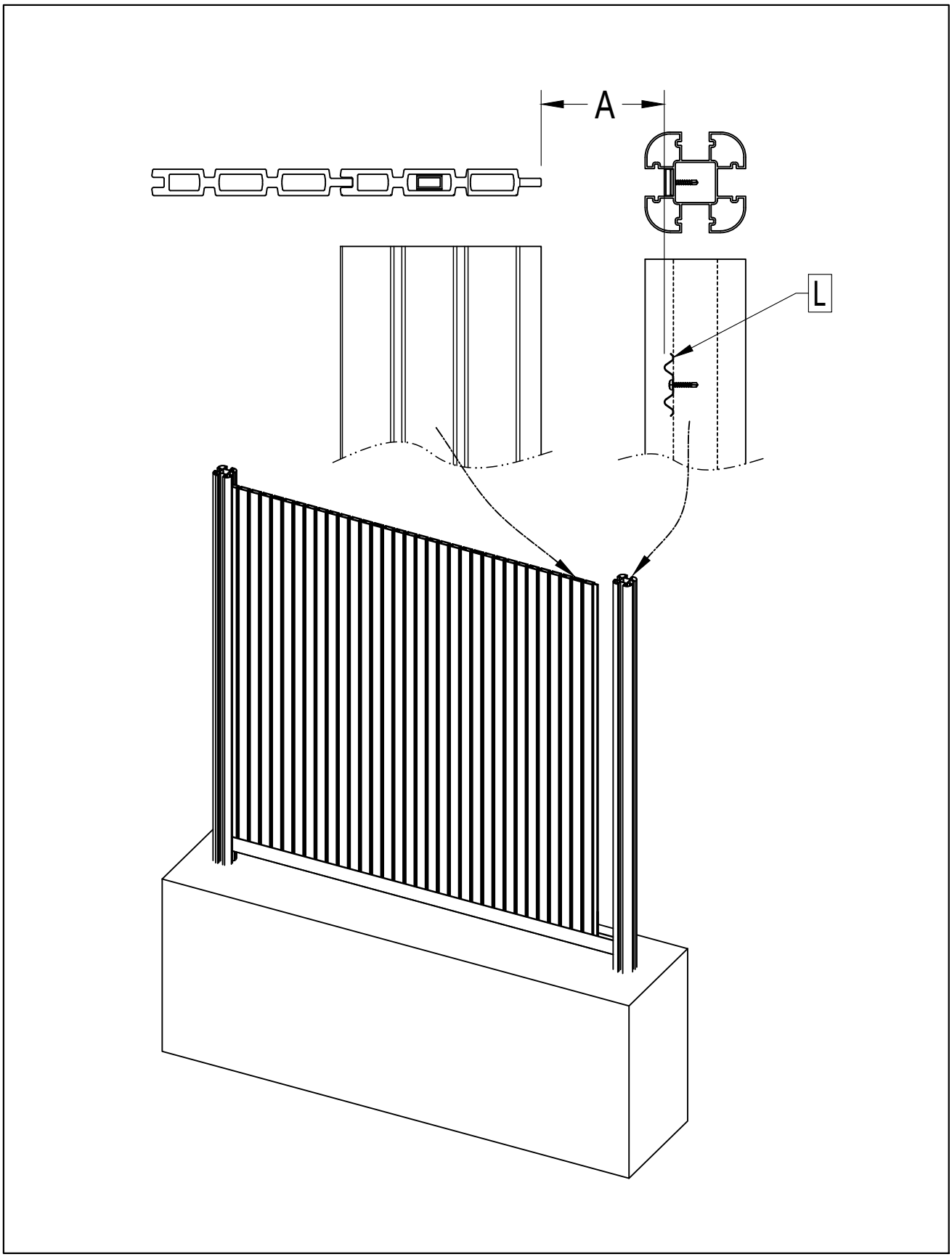

Diagram 3.2.2

3.2.3 Cut the last fence board with the measurement plus 1/2". Use a plastic mallet with board to blunt the force to slot the board into the post, as shown in *Diagram 3.2.3*.

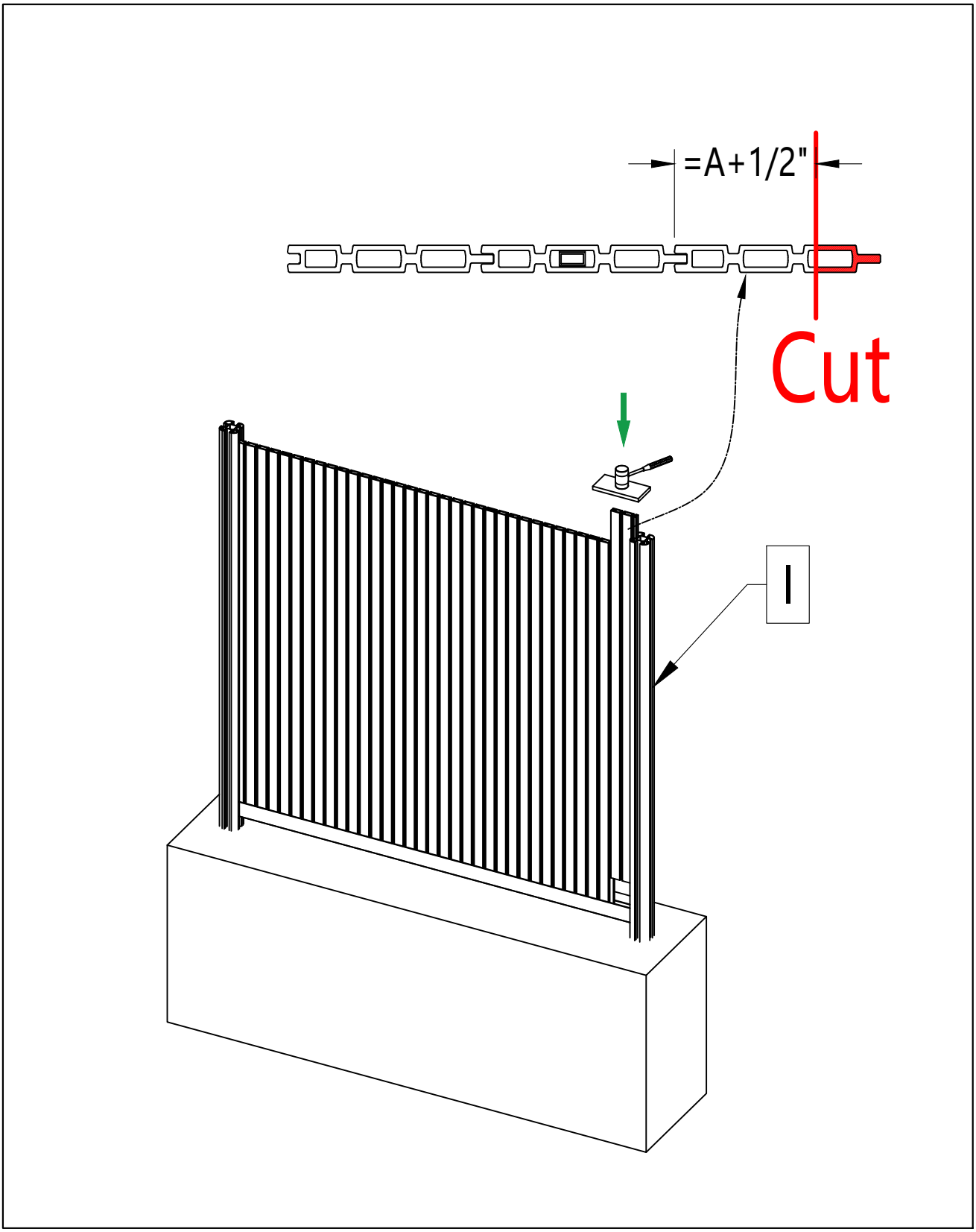

Diagram 3.2.3

Hybrid Fencing UH105

3.3.1 Stick the Rubber Pad (#M) on the two sides of the Galvanized Steel Tube's ends (#D) and insert it inside the fence boards in order, as shown in *Diagram 3.3.1*.

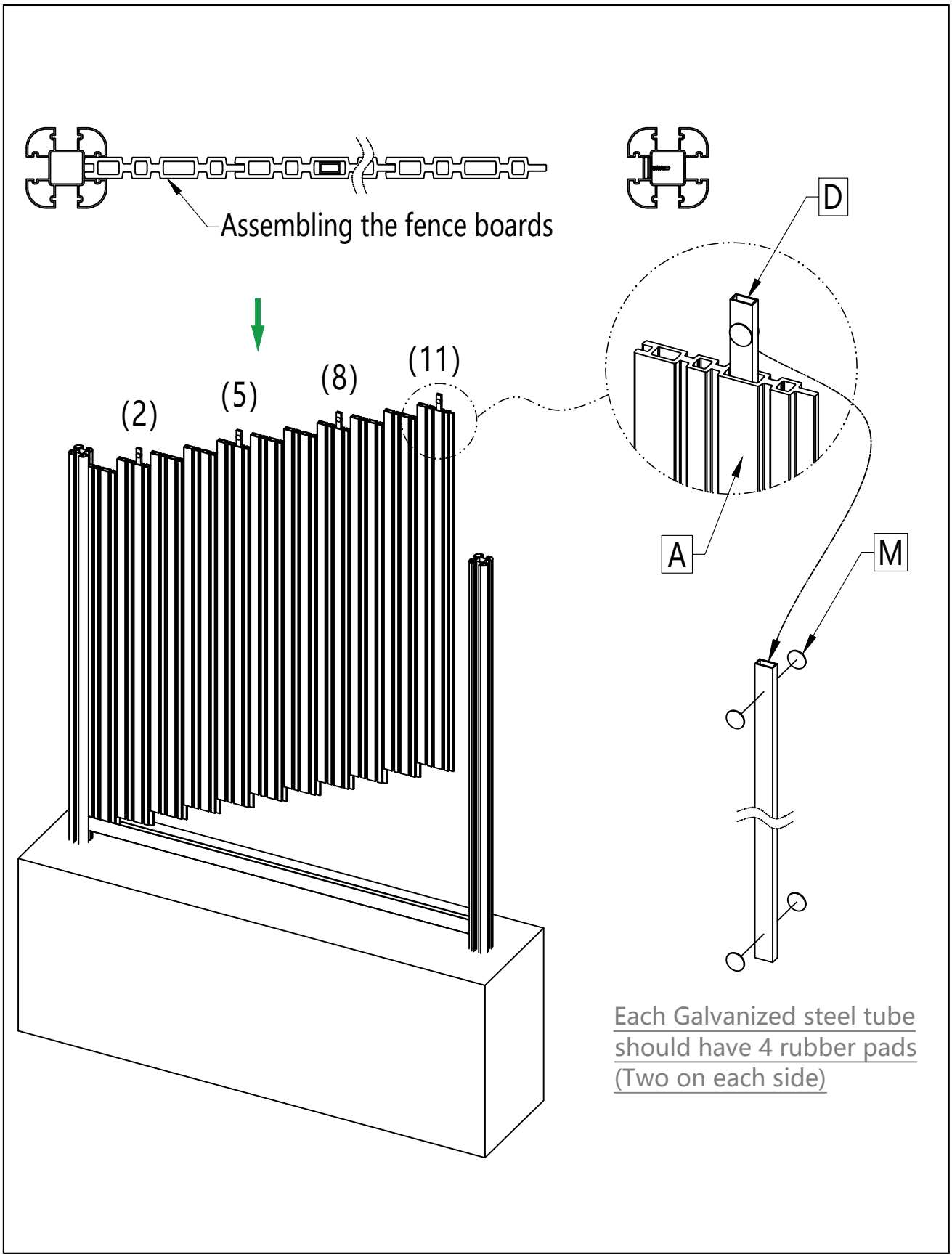

Diagram 3.3.1

3.3.2 Measure the space between the second to last fence board and the Spring Wedge (#L), as shown in *Diagram 3.3.2*.

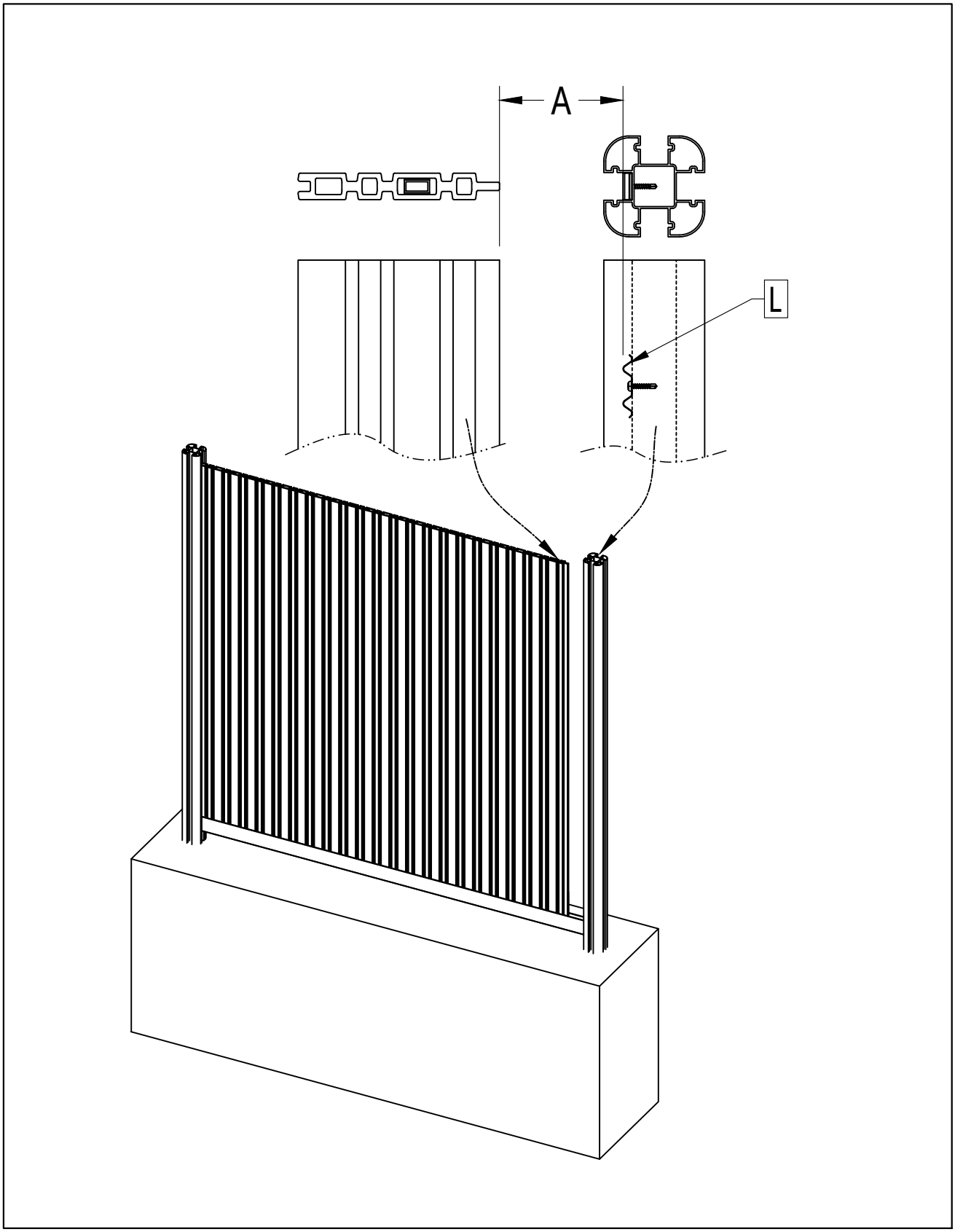

Diagram 3.3.2

3.3.3 Cut the last fence board with the measurement plus 1/2". Use a plastic mallet with a board to blunt the force to slot the last board into the post, as shown in *Diagram 3.3.3*.

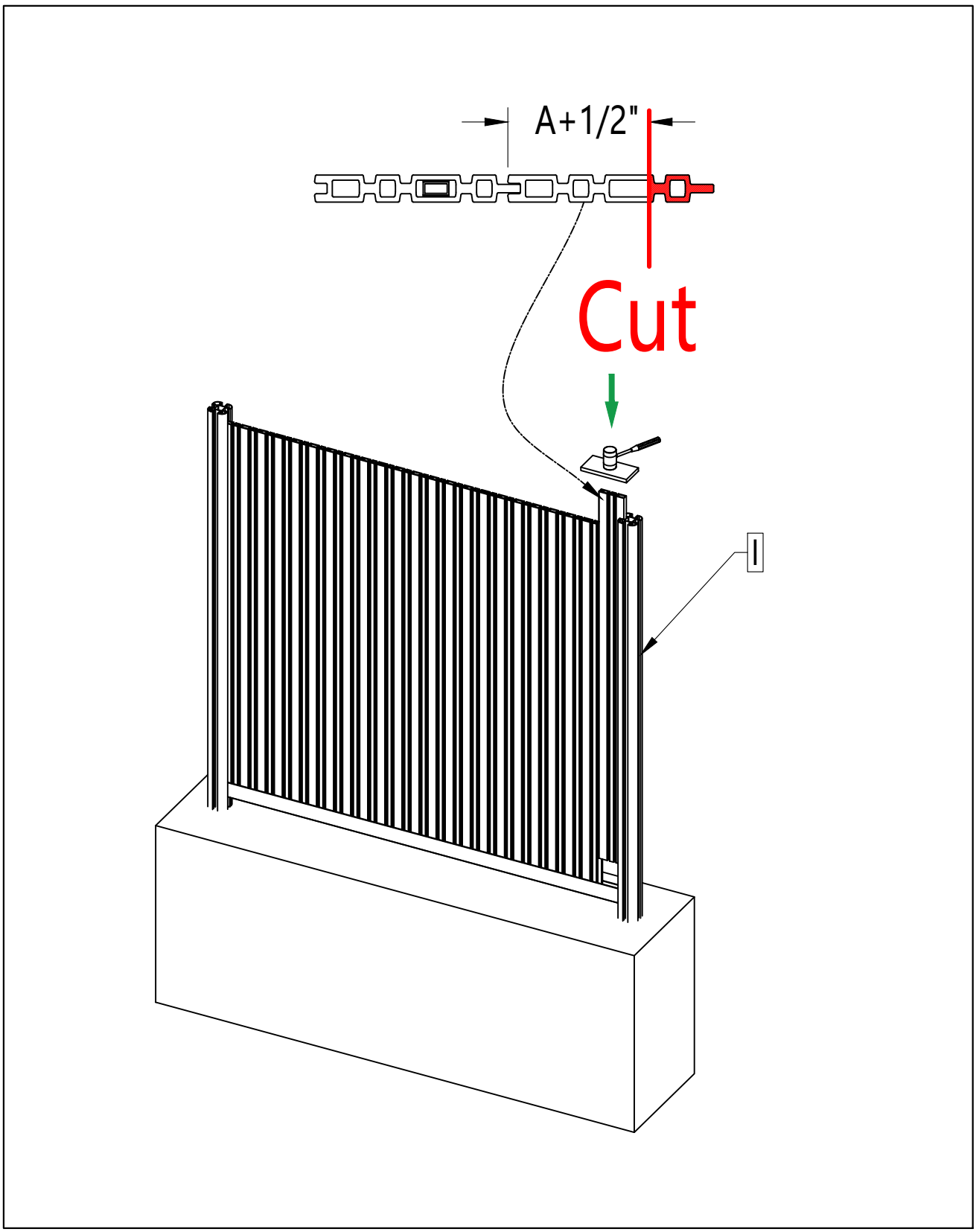

Diagram 3.3.3

Step 4: Top Trim (#B), Post Trim (#J) and Post Cap (#K) Installation

4.1 Slot the Top Trim (#B) into the Posts (#I), as shown in *Diagram 4.1*.

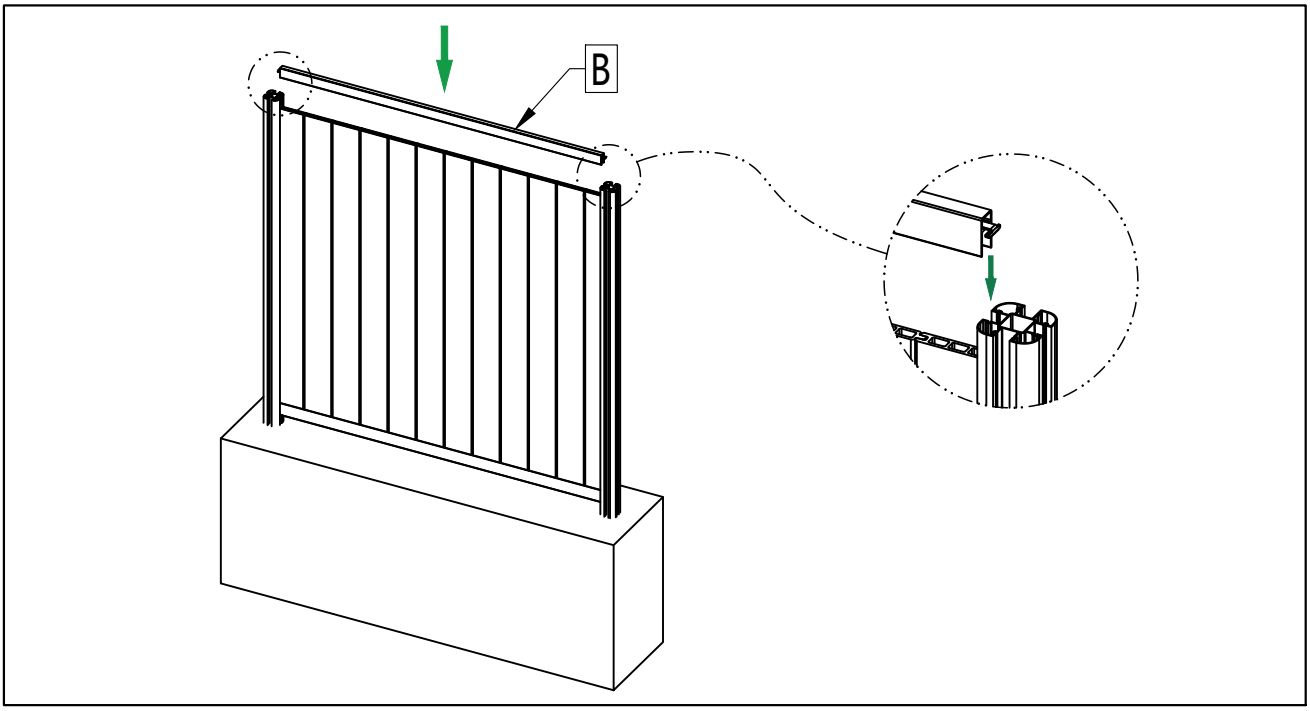

Diagram 4.1

4.2 Measure the distance between the Top Trim (#B) and the post's top. Cut a small piece of Post Trim (#J) and slot it into the post over the top trim, as shown in *Diagram 4.2*.

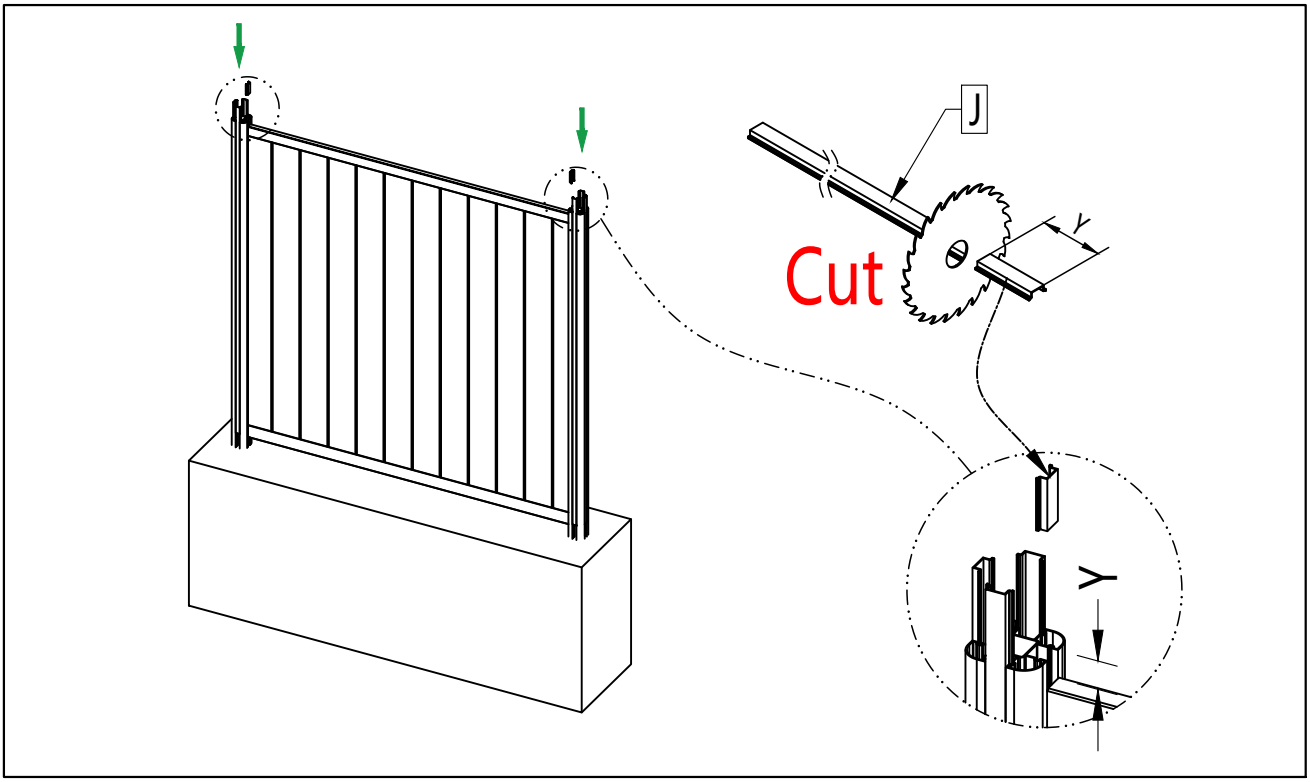

Diagram 4.2

4.3 Attach the Post Cap (#K) on the post, as shown in *Diagram 4.3*

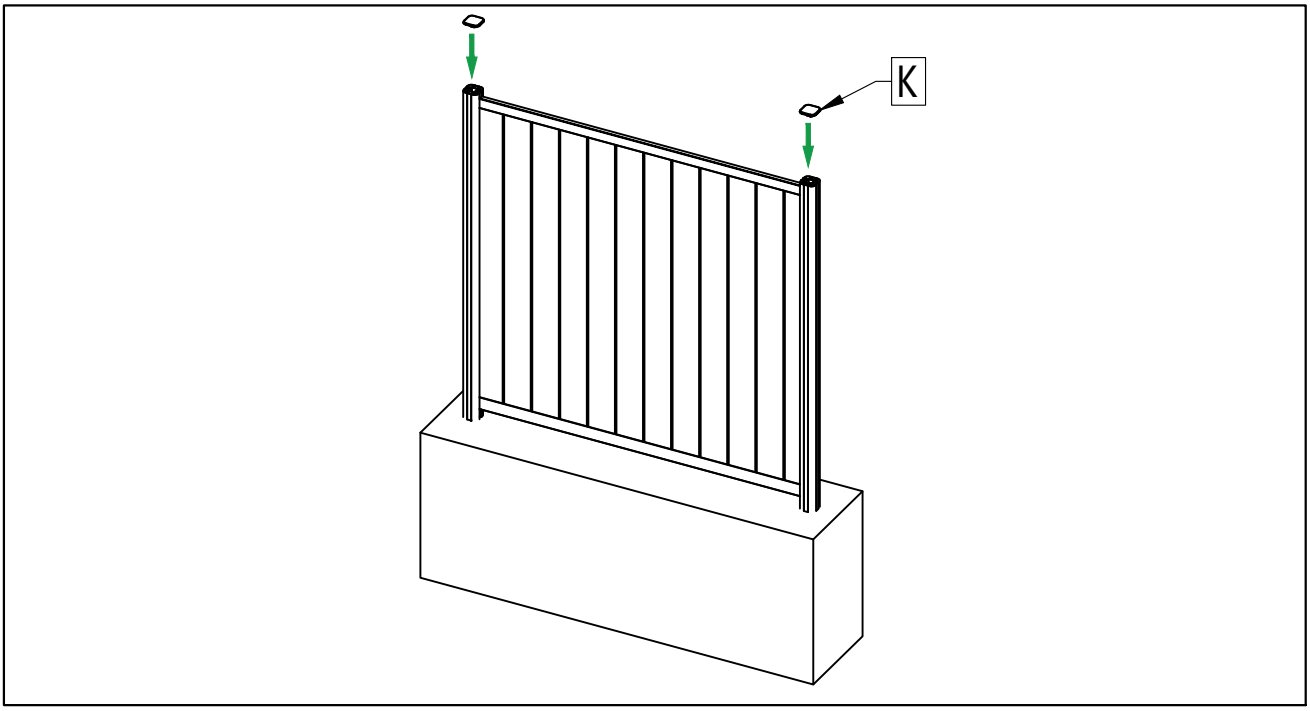

Diagram 4.3

4.4 Final appearance after completion , as shown in *Diagram 4.4*

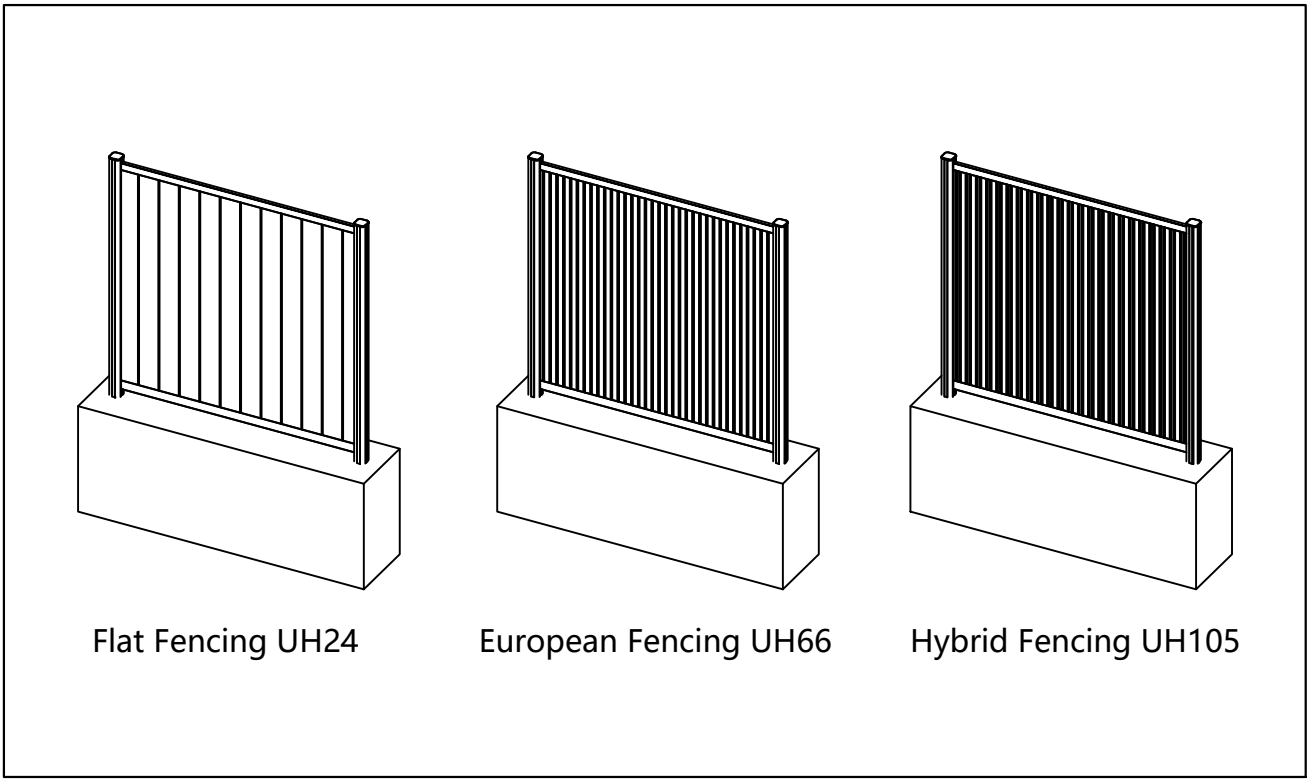

Diagram 4.4

Composite Vertical Fencing Installation Guide

(Flat Fencing UH24)
(European Fencing UH66)
(Hybrid Fencing UH105)

11.11.25 US

©2025 Newtechwood Corporation
NewTechWood® is a registered trademark of Newtechwood Corporation.
For the latest version of this installation guide, visit us online @www.newtechwood.com

NewTechWood®