GENERAL NOTES:

1. THIS PRODUCT APPROVAL DOCUMENT (P.E.D.) FOR NEWTECHWOOD DECORATIVE EUROPEAN WALL CLADDING PANEL UH46 SYSTEM, INDICATED AND SPECIFIED ON THIS DRAWING, HAS BEEN VERIFIED FOR COMPLIANCE IN ACCORDANCE WITH THE 2023 (8th EDITION) OF THE FLORIDA BUILDING CODE. DESIGN WIND LOADS FOR EACH INSTALLATION SHALL BE DETERMINED AS PER SECTIONS 1620 & 1609 OF THE ABOVE MENTIONED CODE, USING ASCE 7-22 STANDARD AND SHALL NOT EXCEED THE MAXIMUM (A.S.D.) DESIGN PRESSURE RATING INDICATED ON THIS SHEET.

   IN ORDER TO VERIFY THE ABOVE CONDITION, ULTIMATE DESIGN WIND LOADS DETERMINED PER ASCE 7-22 SHALL BE FIRST REDUCED TO A.S.D. DESIGN WIND LOADS BY MULTIPLYING THEM BY 0.6 IN ORDER TO COMPARE THESE W/ MAX. (A.S.D.) DESIGN PRESSURE RATINGS INDICATED ON THIS SHEET.

   IN ORDER TO VERIFY THAT COMPONENTS AND ANCHORS ON THIS P.E.D. AS TESTED WERE NOT OVER STRESSED, A 33% INCREASE IN ALLOWABLE STRESS FOR WIND LOADS WAS NOT USED IN THEIR ANALYSIS. A DURATION FACTOR CD=1.60 WAS USED FOR VERIFICATION OF FASTENERS IN WOOD,PER NDS 2018.

   NEWTECHWOOD DECORATIVE EUROPEAN WALL CLADDING PANEL UH46 PROFILES' ADEQUACY FOR WIND AND FATIGUE RESISTANCE HAS BEEN VERIFIED IN ACCORDANCE WITH SECTION 1626 OF THE ABOVE MENTIONED CODE AS PER BLACKWATER TESTING INC. REPORT #BT-NTW-19-002 PER TAS 202 & 203 PROTOCOLS, AND AS PER SUBMITTED STRUCTURAL CALCULATIONS, PERFORMED AS PER SECTIONS 1616 AND 1604 OF THE FLORIDA BUILDING CODE. SEE NOTE 8 BELOW FOR ADDITIONAL TESTING PERFORMED ON PRODUCT.

2. BUILDING WALL SYSTEM WHERE DECORATIVE EUROPEAN WALL CLADDING PANELS WILL BE INSTALLED SHALL BE DESIGNED BY A FLORIDA REGISTERED PROFESSIONAL ENGINEER OR ARCHITECT AND SHALL BE BUILT IN ACCORDANCE WITH THE FLORIDA BUILDING CODE FOR IMPACT, WIND & WATER RESISTANCE AS PER SECTIONS 1626.4(1), 1404.4, 1404.6 AND 1626.4(2), 1404.2 OF THE FLORIDA BUILDING CODE.
   SEE NOTES ON SHEET 5 FOR ADDED LIMITATIONS & CONDITIONS FOR WOOD FRAME WALLS.

3. MAXIMUM A.S.D. DESIGN WIND PRESSURE RATING FOR THIS PRODUCT SHALL NOT EXCEED MAXIMUM VALUES PER SHEET 28.

   * PROFILES TO BE CONTINUOUS MIN. OVER 3 SPANS. UH46 BOARDS MAY BE INSTALLED VERTICALLY OR HORIZONTALLY STRICTLY FOLLOWING THE DETAILS INDICATED ON THIS DRAWING.

4. COMPONENTS FOR THIS PRODUCT SHALL BE AS INDICATED ON SHEETS 2 & 3 OF THIS DRAWING.

5. SUBFRAME AND CORNER COMPONENTS PROVIDING SUPPORT TO NEWTECHWOOD DECORATIVE EUROPEAN WALL CLADDING PANEL UH46 SYSTEM MUST BE PROPERLY ANCHORED TO TRANSFER LOADS TO THE EXISTING STRUCTURAL WALL. SUBFRAME PROFILES MUST BE AS INDICATED ON BILL OF MATERIALS SHEET 2 AND 3 AND SHALL BE SPACED AS PER DETAILS ON SHEETS 4 THRU 27.

6. THIS PRODUCT'S INSTALLATION SHALL COMPLY WITH ALL SPECS INDICATED IN THIS DRAWING PLUS ANY BUILDING AND ZONING REGULATIONS PROVIDED BY THE JURISDICTION WHERE PERMIT IS APPLIED TO.

7. (a) THIS P.E.D. PREPARED BY THIS ENGINEER IS GENERIC AND DOES NOT PROVIDE INFORMATION FOR A SITE SPECIFIC PROJECT: i.e. WHERE THE SITE CONDITIONS DEVIATE FROM THE P.E.D.

   (b) CONTRACTOR TO BE RESPONSIBLE FOR THE SELECTION, PURCHASE AND INSTALLATION INCLUDING LIFE SAFETY OF THIS PRODUCT BASED ON THIS P.E.D. PROVIDED HE/SHE DOES NOT DEVIATE FROM THE CONDITIONS DETAILED IN THIS DOCUMENT.
   CONSTRUCTION SAFETY AT SITE IS THE CONTRACTOR'S RESPONSIBILITY.

   (C) THIS P.E.D. WILL BE CONSIDERED INVALID IF MODIFIED.

   (d) SITE SPECIFIC PROJECTS SHALL BE PREPARE BY A FLORIDA REGISTERED ENGINEER OR ARCHITECT WHICH WILL BE RESPONSIBLE FOR THE PROPER USE OF THE P.E.D.. PROFESSIONAL OF RECORD, ACTING AS A DELEGATED ENGINEER TO THE P.A.D. ENGINEER SHALL SUBMIT TO THIS LATTER THE SITE SPECIFIC DRAWINGS FOR REVIEW.

   (e) ORIGINAL P.E.D. SHALL BEAR THE DATE AND ORIGINAL SEAL AND SIGNATURE OF THE PROFESSIONAL ENGINEER THAT PREPARED IT.

8. DECORATIVE EUROPEAN WALL CLADDING PANEL UH46 SYSTEM PROFILES ARE MADE OF A TECHNOLOGICAL WOOD MATERIAL COMPOSED OF THE COMBINATION OF A PVC COMPONENT AND WOOD FIBERS TO CREATE A MATERIAL WITH A DIMENSIONAL STABILITY THAT IS MUCH GREATER THAN BOTH TRADITIONAL WPC AND WOOD ITSELF.
   PANEL HAS NO PROBLEM RESISTING WATER BECAUSE 80% OF THE WOOD FIBERS ARE COATED BY THE POLYMERIC COMPONENT (PVC AND OTHER ELEMENTS IN THE FORMULA) AND ITS ALSO COATED WITH A CAP LAYER MADE OF POLYETHYLENE BASED COMPOUNDED POLYMER W/58 HARDNESS, PROVIDED BY NEWTECHWOOD AMERICA, INC. CONTAINS NO TOXIC MATERIALS, IS LEED COMPLAINT (SUSTAINABILITY) AND IS NOT SUBJECT TO THE DESTRUCTIVE ACTION OF WOODWORM, FUNGI AND PARASITES. THERMAL EXPANSION MUST BE CONSIDERED DEPENDING ON PANEL LENGTH BY USING COEFFICIENT OF THERMAL EXPANSION LISTED BELOW.
   PANEL MATERIAL FIRE BURNING CHARACTERISTICS AND WEATHERING HAVE BEEN VERIFIED AS FOLLOWS:

QUALIFICATION	TEST METHOD	TEST RESULT
DENSITY	ASTM D 2395	1.14 gr/cm³ (71.1lb/ft³)
BENDING STRENGTH	ASTM D 4761	3,000 psi
MODULUS OF ELASTICITY	ASTM D 4761	493,000 psi
COEFFICIENT OF LINEAR THERMAL EXPANSION	ASTM D 696	35.6 x10^{-6} mm/mm °C
WATER ABSORPTION AND HUMIDITY	ASTM D 1073	LITTLE UP TO NO WATER ABSORPTION. (0.11 %) (ONLY SURFACE MOISTURING)
FLAME SPREAD	ASTM E 84	80 (CLASS C)*
SMOKE INDEX	ASTM E 84	300 (CLASS C)*
RATE, EXTENT & TIME OF BURNING	ASTM D 635	CC1 *
SPONTANEOUS SELF/IGNITION TEMP.	ASTM D 1929	820° F *
FLASH IGNITION TEST	ASTM D 1929	800° F *
WEATHERING FOR OUTDOOR EXPOSURE	ASTM G 155 ASTM D 638	9.1% **

   * TEST # RJ6449F-1, RJ6449F-2 & RJ6449F-3 BY QAI LAB.

   ** PER BLACKWATER TESTING INC. REPORT # BT-NTW-19-001

9. PRODUCT MANUFACTURER'S LABEL SHALL BE PLACED ON A READILY VISIBLE AT PLANK LOCATION IN ACCORDANCE WITH SECTION 1703.5 OF THE FLORIDA BUILDING CODE.

THIS DRAWING SHALL ONLY BE USED TO OBTAIN PERMITS IN THE STATE OF FLORIDA

WALTER A. TILLIT JR. LICENSE No. 44167 STATE OF FLORIDA PROFESSIONAL ENGINEER

FLORIDA BUILDING CODE (HIGH & NON HIGH VELOCITY HURRICANE ZONE)

©2023 TILTECO, INC.

TILTECO INC.
TILLIT TESTING & ENGINEERING COMPANY
8355 N.W. 36th, St., Ste. 300, MIAMI GARDENS, FL 33166
Phone : (305)871-1333 Fax : (305)871-1331
CA-0006719
WALTER A. TILLIT Jr. P.E.
FLORIDA Lic. # 44167

REV. NO	DESCRIPTION	DATE	REV. No	DESCRIPTION	DATE
1	OLD 19-088	7/14/23	3	-	-
2	-	-	4	-	-

NEWTECHWOOD DECORATIVE EUROPEAN WALL CLADDING PANEL UH46 SYSTEM

NEWTECHWOOD AMERICA INC.
15912 INTERNATIONAL PLAZA DRIVE.
HOUSTON, TEXAS 77032

Y.M.
DRAWN BY:

7/14/23
DATE:

23-111
DRAWING No.

SHEET 1 OF 28

P.E. SEAL/SIGNATURE/DATE
7/14/2023

BILL OF MATERIALS

COMPONENT No.	PART #	DESCRIPTION	DIMENSIONS	MATERIAL	MANUFACTURER	NOTES
1.	AW02	STARTER CLIP	SEE COMPONENT DETAIL	6063-T5 ALLOY	NEWTECHWOOD	USE AT ENDS AS APPLICABLE
2A.	-	FLAT HEAD WOOD SCREW	#8-18 x 3/4"	AISI 304 STAINLESS STEEL	NEWTECHWOOD	TO FIX 5 TO 9A
2A1.	-	FLAT HEAD WOOD SCREW	#8-18 x 1 1/4"	AISI 304 STAINLESS STEEL	NEWTECHWOOD	TO FIX 3 TO 9A THRU 12
2B.	-	FLAT HEAD SELF DRILLING SCREW	#8-18 x 1/2"	AISI 410 STAINLESS STEEL	NEWTECHWOOD	TO FIX 5 TO 9B
2B1.	-	FLAT HEAD SELF DRILLING SCREW	#8-18 x 1"	AISI 410 STAINLESS STEEL	NEWTECHWOOD	TO FIX 3 TO 9B THRU 12
3.*	UH-46	EUROPEAN SIDING BOARD	SEE COMPONENT DETAIL	COMPOSITE PLASTIC WOOD NEWTECHWOOD	NEWTECHWOOD	CLADDING SYSTEM
5.	AW08	MOUNTING CLIP	SEE COMPONENT DETAIL	6063-T5 ALLOY	NEWTECHWOOD	USE IN BETWEEN 3
7.	T-7	SPACER	SEE COMPONENT DETAIL	RUBBER	NEWTECHWOOD	USE AT END, OPTIONAL TO 12 , CONNECT TO 9A , 9B W/2A OR 2B RESPECTIVELY.
8.*	UH-50	F-TRIM COVER	SEE COMPONENT DETAIL	COMPOSITE PLASTIC WOOD NEWTECHWOOD	NEWTECHWOOD	USE AT END, OPTIONAL TO 12 , CONNECT TO 9A , 9B W/2A OR 2B
9A.	-	WOOD SUBFRAME	1.5" x 0.75"x CONTINUOUS.	P.T. SOUTHERN PINE #2(G=0.55)	NEWTECHWOOD	SUPPORT FOR 3 FIXED TO EXISTING STRUCTURE W/ 10
9A1.	-	WOOD SUBFRAME	2.00" x 0.75"x CONTINUOUS.	P.T. SOUTHERN PINE #2(G=0.55)	NEWTECHWOOD	SUPPORT FOR 8 FIXED TO EXISTING STRUCTURE W/ 10
9A2.	-	L WOOD CORNER FOR 11	SEE COMPONENT DETAIL	P.T. SOUTHERN PINE #2(G=0.55)	NEWTECHWOOD	SUPPORT FOR 11 FIXED TO EXISTING STRUCTURE W/10
9B.	-	TUBE SUBFRAME	1.00" x 0.50" x 0.059" THK. x CONT.	6063-T5 ALLOY	NEWTECHWOOD	SUPPORT FOR 3 FIXED TO EXISTING STRUCTURE W/ 10
9B1.	-	PLATE SUBFRAME	2.00" x 0.50"x CONTINUOUS.	6063-T5 ALLOY	NEWTECHWOOD	SUPPORT FOR 11 FIXED TO EXISTING STRUCTURE W/10
9B2.	-	METAL PLATES CORNER FOR 11	SEE COMPONENT DETAIL	6061-T6 ALLOY	NEWTECHWOOD	SUPPORT FOR 11 FIXED TO EXISTING STRUCTURE W/10
10.	-	FASTENERS FOR 9A, 9A1, 9A2 & 9B, 9B1, 9B2	1/4"ø FLAT HEAD ULTRACONS	AISI 410 STAINLESS STEEL	ELCO CONST. PROD.	SEE ANCHOR SCHEDULES AND SPEC'S ON SHEET 28
11.*	UH-51	OUTSIDE CORNER TRIM	SEE COMPONENT DETAIL	COMPOSITE PLASTIC WOOD NEWTECHWOOD	NEWTECHWOOD	CLADDING SYSTEM USE AT EXTERIOR CORNERS. FIX TO 9A OR 9B W/ 2A OR 2B
12.	-	WOOD SHIM	SEE COMPONENT DETAIL	P.T. SOUTHERN PINE #2(G=0.55)	NEWTECHWOOD	USE TO FIX 3 TO WALL THRU 9A , 9B W/ 10 & 12

FLORIDA BUILDING CODE (HIGH & NON HIGH VELOCITY HURRICANE ZONE)

NEWTECHWOOD DECORATIVE EUROPEAN WALL CLADDING PANEL UH46 SYSTEM

NEWTECHWOOD AMERICA INC.
15912 INTERNATIONAL PLAZA DRIVE,
HOUSTON, TEXAS 77032

REV. NO	DESCRIPTION	DATE
1	OLD 19-088	7/14/23
2	-	-

REV. NO	DESCRIPTION	DATE
3	-	-
4	-	-

Y.M. DRAWN BY:
7/14/23 DATE:
23-111 DRAWING No.
SHEET 2 OF 28

©2023 TILTECO, INC.

TILTECO INC.
TILLIT TESTING & ENGINEERING COMPANY
6335 N.W. 36th. St. Ste. 300, VIRGINIA GARDENS, FL 33166
Phone : (305)871-1530 Fax : (305)871-1531
WALTER A. TILLIT Jr. P.E.
FLORIDA Lic. # 44167

WALTER A. TILLIT JR. LICENSE No. 44167 STATE OF FLORIDA PROFESSIONAL ENGINEER

7/14/2023

P.E. SEAL/SIGNATURE/DATE

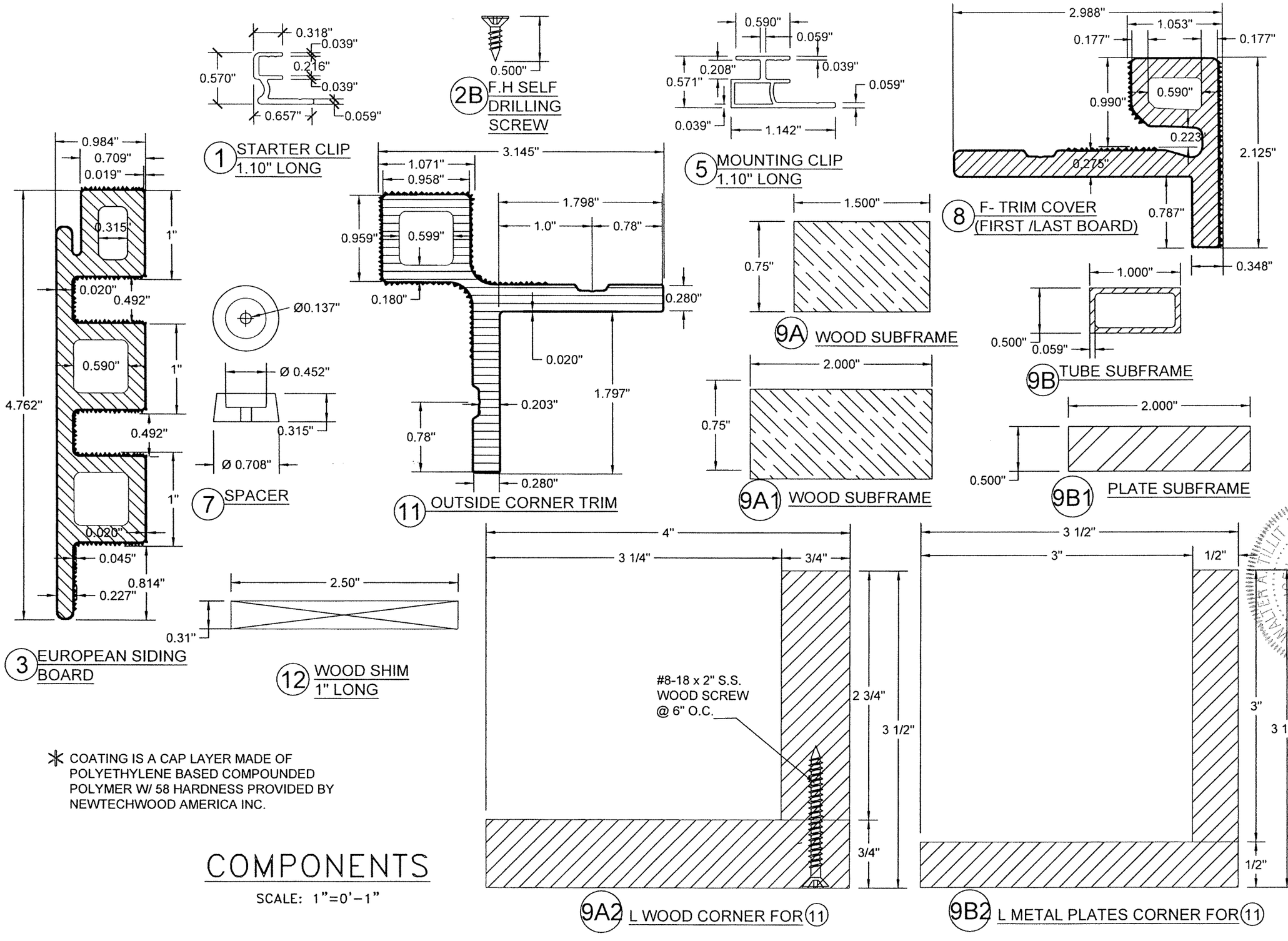

✳ COATING IS A CAP LAYER MADE OF POLYETHYLENE BASED COMPOUNDED POLYMER W/ 58 HARDNESS PROVIDED BY NEWTECHWOOD AMERICA INC.

COMPONENTS

SCALE: 1"=0'-1"

FLORIDA BUILDING CODE (HIGH & NON HIGH VELOCITY HURRICANE ZONE)

NEWTECHWOOD DECORATIVE EUROPEAN WALL CLADDING PANEL UH46 SYSTEM

NEWTECHWOOD AMERICA INC.
15912 INTERNATIONAL PLAZA DRIVE,
HOUSTON, TEXAS 77032

DRAWN BY:	DATE:	DRAWING No.	SHEET
Y.M.	7/14/23	23-111	3 OF 28

REV. NO	DESCRIPTION	DATE	REV. No	DESCRIPTION	DATE
1	G.D. 1/7-2023	7/14/23	3	-	-
2	-	-	4	-	-

©2023 TILTECO, INC.

TILTECO INC.
TILLIT TESTING & ENGINEERING COMPANY
6330 N.W. 36th. St. Ste. 300, VIRGINIA GARDENS, FL 33166
Phone : (305)871-1330 Fax : (305)871-1331
CA-0006719
WALTER A. TILLIT Jr. P.E.
FLORIDA Lic. # 44167

P.E. SEAL/SIGNATURE/DATE

WALTER A. TILLIT JR. LICENSE No. 44167 STATE OF FLORIDA PROFESSIONAL ENGINEER

7/14/2023

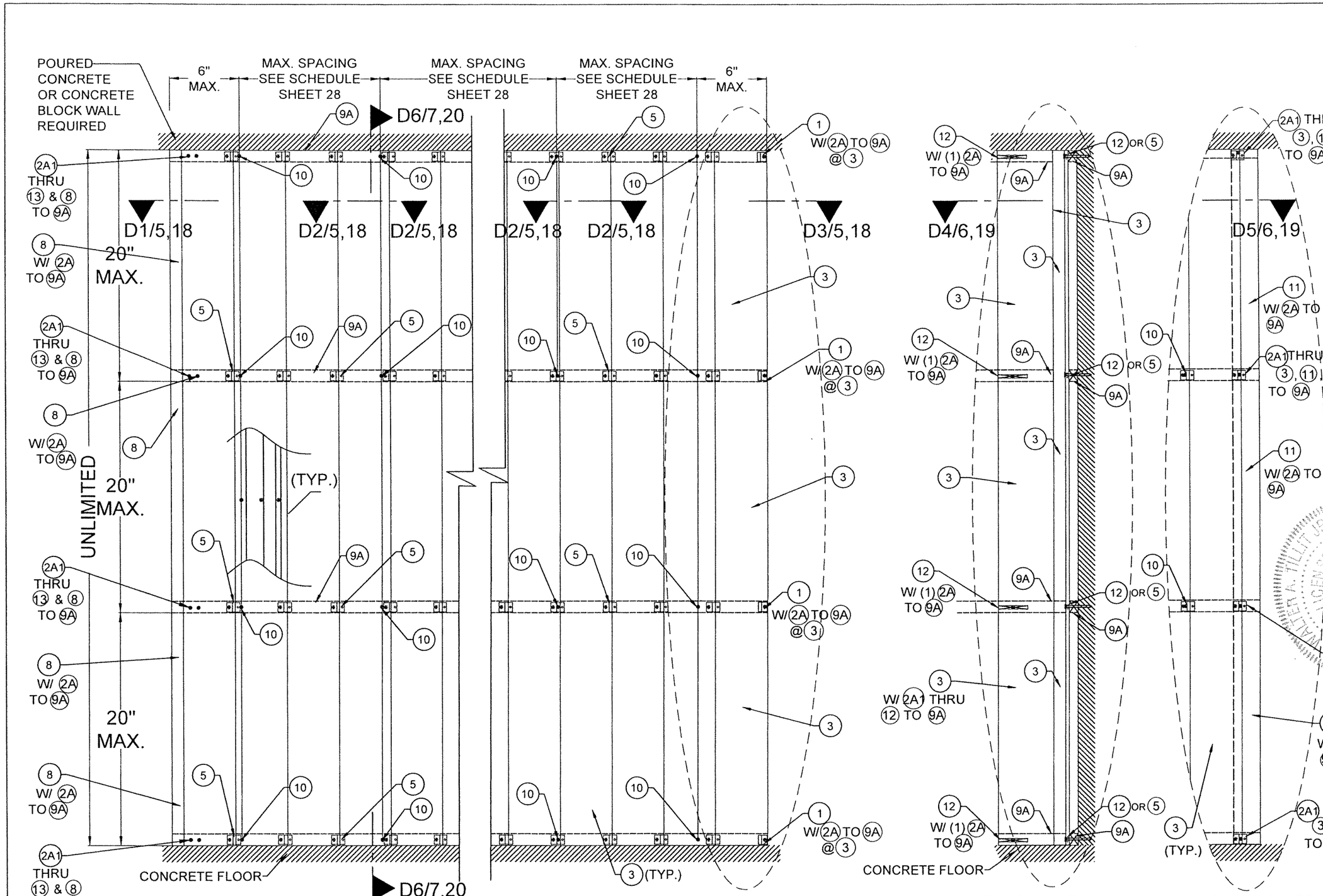

VERTICAL INSTALLATION EXTERIOR ELEVATION W/ 9A
POURED CONCRETE, CONCRETE BLOCK WALL
SUBSTRATE & WOOD FRAME BUILDINGS

CORNER W/ 3 & 9A

INT. CORNER
W/ 3 & 9A

EXT. CORNER
W/ 11 & 9A

FLORIDA BUILDING CODE (HIGH & NON HIGH VELOCITY HURRICANE ZONE)

NEWTECHWOOD DECORATIVE EUROPEAN WALL CLADDING PANEL UH46 SYSTEM

NEWTECHWOOD AMERICA INC.
15912 INTERNATIONAL PLAZA DRIVE,
HOUSTON, TEXAS 77032

DRAWN BY: Y.M.
DATE: 7/14/23
DRAWING No. 23-111
SHEET 4 OF 28

REV. NO	DESCRIPTION	DATE
1	D&S 19-088	-
2	-	-

REV. No	DESCRIPTION	DATE
3	-	-
4	-	-

©2023 TILTECO, INC.

TILTECO INC.
TILLIT TESTING & ENGINEERING COMPANY
6355 N.W. 36th, St. Ste. 305, VIRGINIA GARDENS, FL 33166
Phone : (305)871-1521 Fax : (305)871-1521
CA-0006719
WALTER A. TILLIT Jr. P.E.
FLORIDA Lic. # 44167

WALTER A. TILLIT JR. STATE OF FLORIDA No. 44167 PROFESSIONAL ENGINEER

7/14/2023

P.E. SEAL/SIGNATURE/DATE

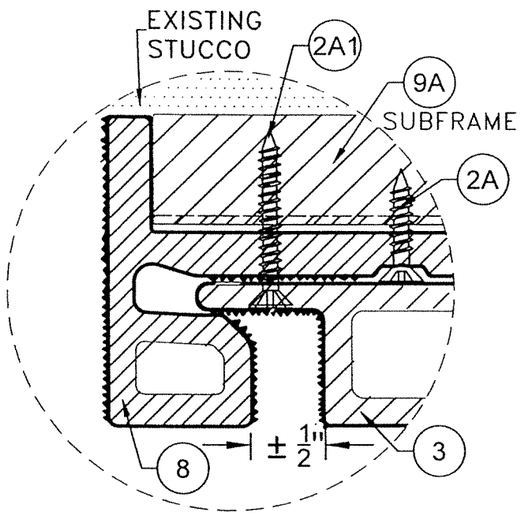

DETAIL 1
N.T.S.

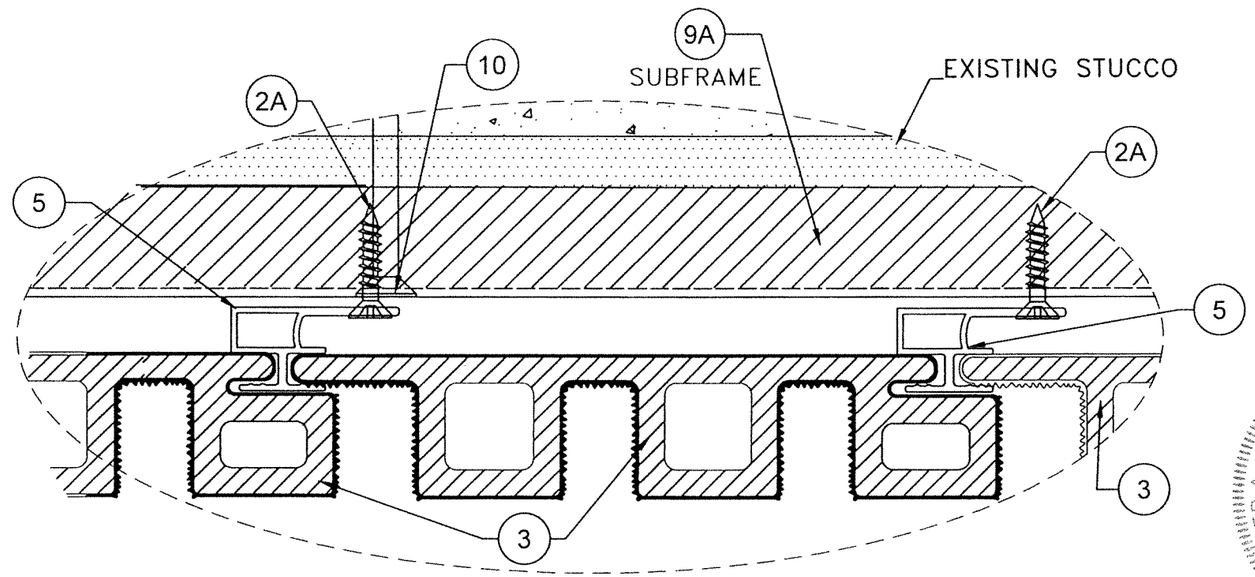

DETAIL 2
N.T.S.

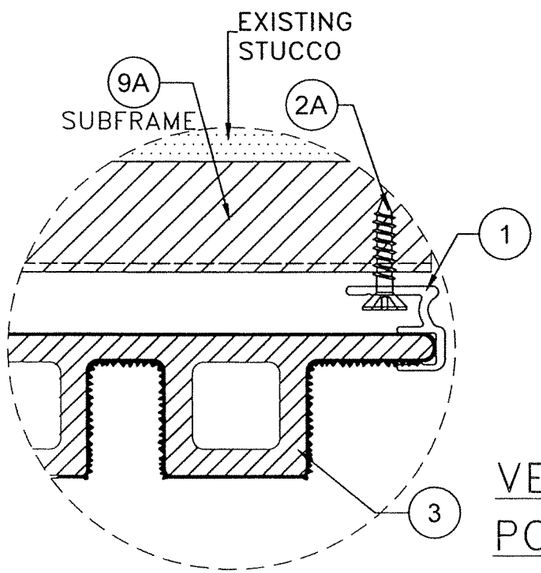

DETAIL 3
N.T.S.

VERTICAL INSTALLATION W/ 9A : ENDS
POURED CONCRETE OR CONCRETE BLOCK WALL SUBSTRATE

FLORIDA BUILDING CODE (HIGH & NON HIGH VELOCITY HURRICANE ZONE)

©2023 TILTECO, INC.

TILTECO INC.
TILLIT TESTING & ENGINEERING COMPANY
6335 N.W. 36th. St. Ste. 305, VIRGINIA GARDENS, FL 33166
Phone : (305)871-1551 Fax : (305)871-1551
CA-0006719
WALTER A. TILLIT Jr. P.E.
FLORIDA Lic. # 44167

NEWTECHWOOD DECORATIVE EUROPEAN WALL CLADDING PANEL UH46 SYSTEM

NEWTECHWOOD AMERICA INC.
15912 INTERNATIONAL PLAZA DRIVE,
HOUSTON, TEXAS 77032

REV. NO	DESCRIPTION	DATE	REV. No	DESCRIPTION	DATE
1	ISSD. FOR-HBD	7/14/23	2	-	-
3	-	-	4	-	-

DRAWN BY: Y.M.
DATE: 7/14/23
DRAWING No. 23-111
SHEET 5 OF 28

WALTER A. TILLIT JR. LICENSE No. 44167 STATE OF FLORIDA PROFESSIONAL ENGINEER

P.E. SEAL/SIGNATURE/DATE

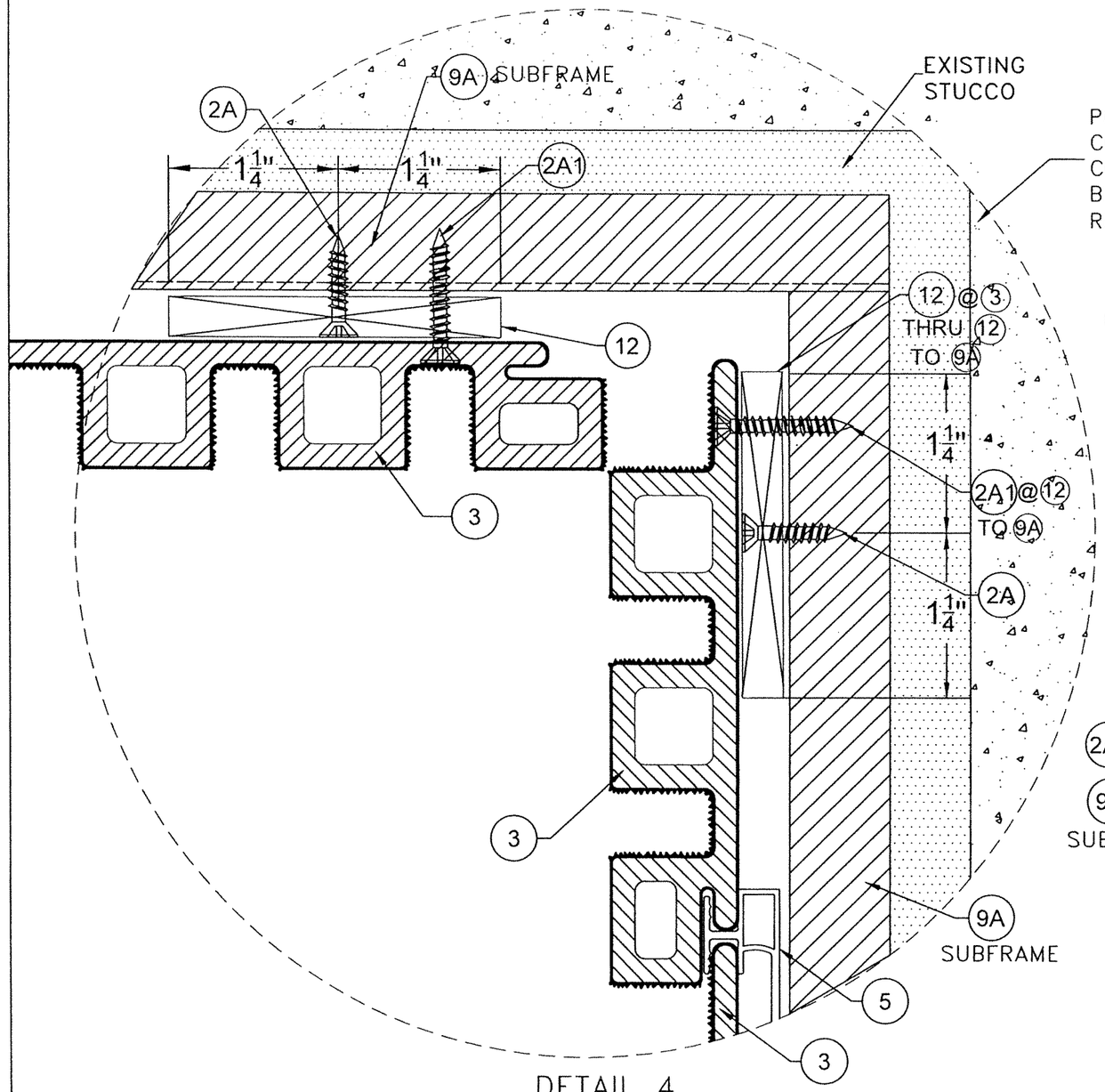

DETAIL 4
N.T.S.

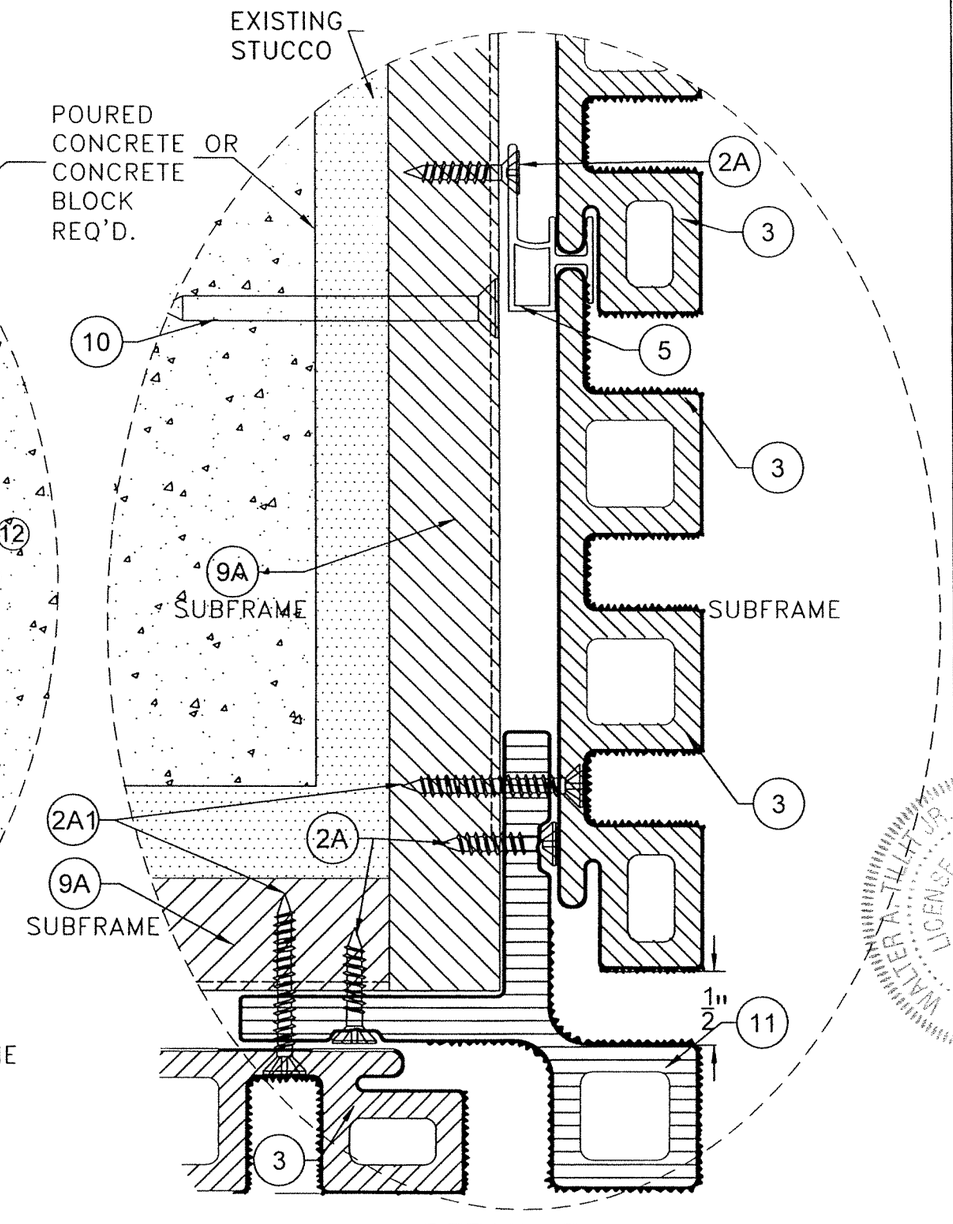

DETAIL 5
N.T.S.

VERTICAL INSTALLATION W/ 9A INTERIOR & EXTERIOR CORNER POURED CONCRETE OR CONCRETE BLOCK WALL SUBSTRATE

FLORIDA BUILDING CODE (HIGH & NON HIGH VELOCITY HURRICANE ZONE)

©2023 TILTECO, INC.

TILTECO INC.
TILLIT TESTING & ENGINEERING COMPANY
6335 N.W. 30th, St. Ste. 320, MIGMI GARDS, FL 33166
Phone : (305)871-1531 Fax : (305)871-1531
WALTER A. TILLIT Jr. P.E.
FLORIDA Lic. # 44167

REV. NO	DESCRIPTION	DATE
1	GD 15-088	7/14/23
2	-	-

REV. No	DESCRIPTION	DATE
3	-	-
4	-	-

NEWTECHWOOD DECORATIVE EUROPEAN WALL CLADDING PANEL UH46 SYSTEM

NEWTECHWOOD AMERICA INC.
15912 INTERNATIONAL PLAZA DRIVE,
HOUSTON, TEXAS 77032

DRAWN BY: Y.M.
DATE: 7/14/23
DRAWING No. 23-111
SHEET 6 OF 28

WALTER A. TILLIT Jr. LICENSE No. 44167 STATE OF FLORIDA PROFESSIONAL ENGINEER

7/14/2023

P.E. SEAL/SIGNATURE/DATE

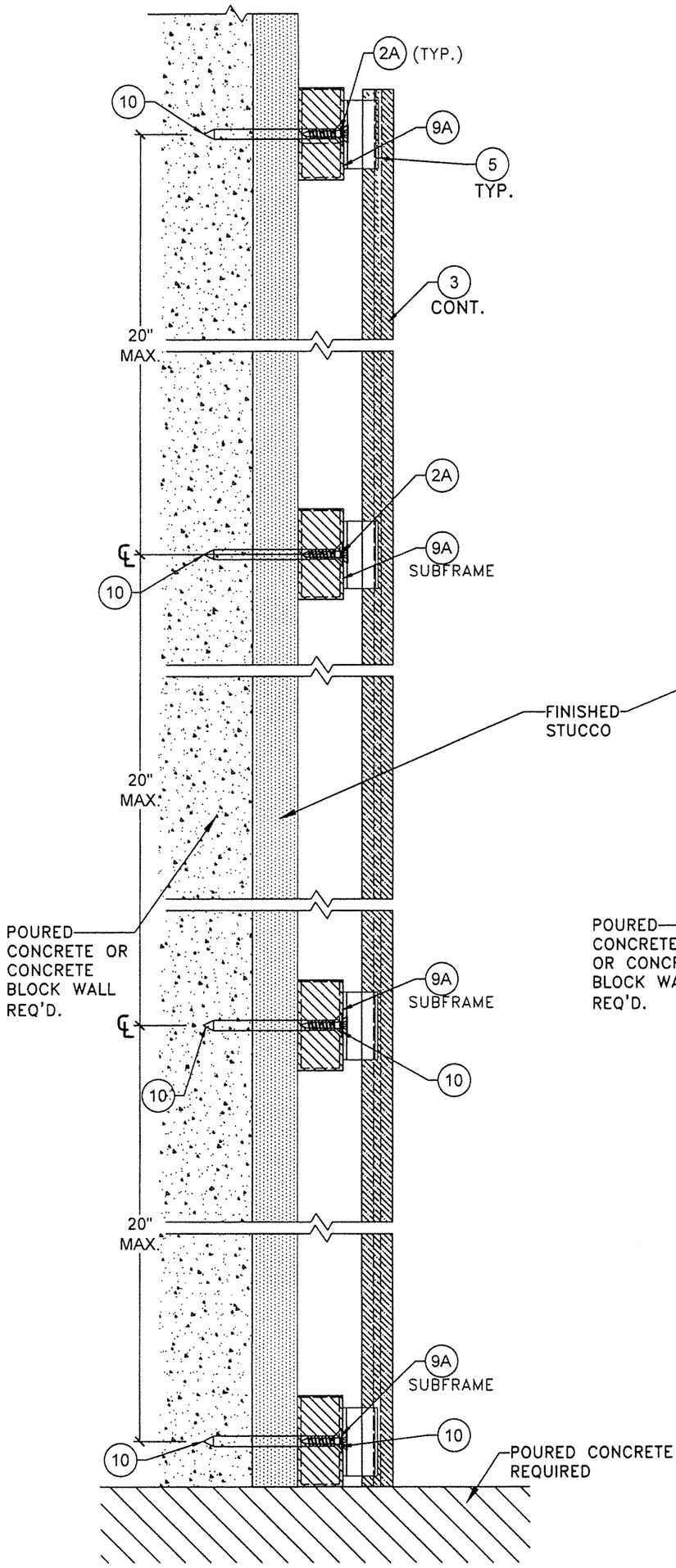

DETAIL 6

VERTICAL INSTALLATION W/ (9A)
POURED CONCRETE OR CONCRETE
BLOCK WALL SUBSTRATE

N.T.S

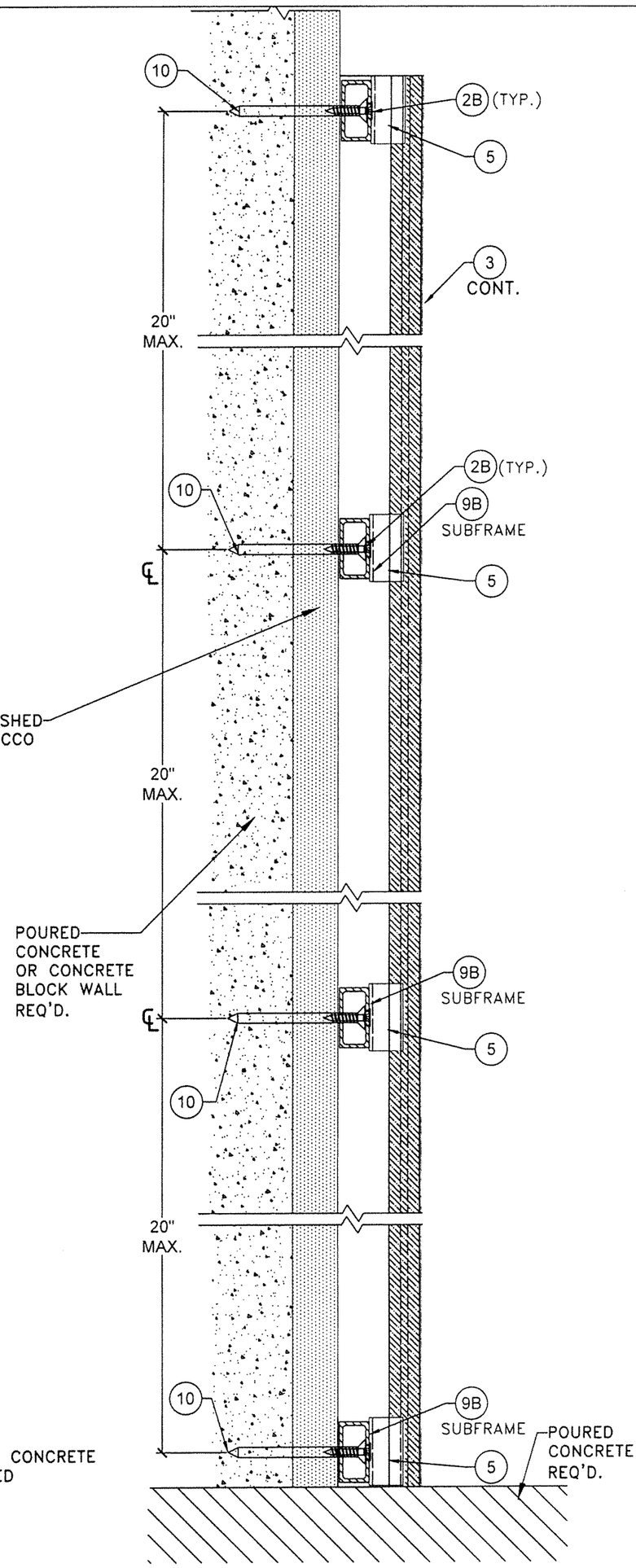

DETAIL 7

VERTICAL INSTALLATION W/ (9B)
POURED CONCRETE OR CONCRETE
BLOCK WALL SUBSTRATE

N.T.S

WALTER A. TILLIT JR. LICENSE No. 44167 STATE OF FLORIDA PROFESSIONAL ENGINEER

7/14/2023

P.E. SEAL/SIGNATURE/DATE

FLORIDA BUILDING CODE (HIGH & NON HIGH VELOCITY HURRICANE ZONE)

©2023 TILTECO, INC.

TILTECO INC.

TILLIT TESTING & ENGINEERING COMPANY
6335 N.W. 36th. St., Ste. 305, VIRGINIA GARDENS, FL 33166
Phone : (305)871-1530 . Fax : (305)871-1531
CA-0006719
WALTER A. TILLIT Jr. P.E.
FLORIDA Lic. # 44167

NEWTECHWOOD DECORATIVE EUROPEAN WALL CLADDING PANEL UH46 SYSTEM

NEWTECHWOOD AMERICA INC.
15912 INTERNATIONAL PLAZA DRIVE,
HOUSTON, TEXAS 77032

REV. NO	DESCRIPTION	DATE	REV. No	DESCRIPTION	DATE
1	OLD 19-085	7/14/23	3	-	-
2	-	-	4	-	-

DRAWN BY:	Y.M.
DATE:	7/14/23
DRAWING No.	23-111
	SHEET 7 OF 28

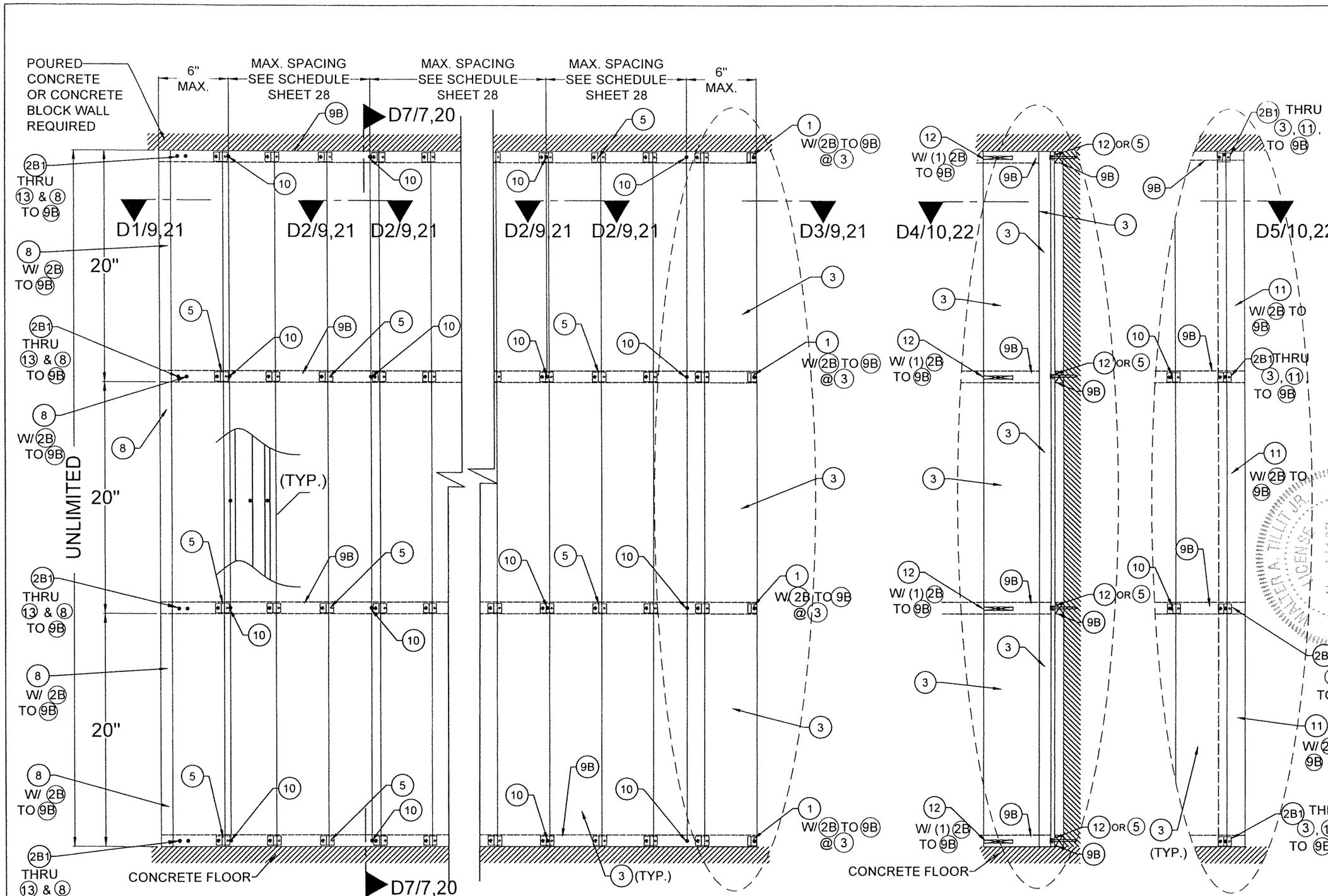

VERTICAL INSTALLATION EXTERIOR ELEVATION W/ 9B
POURED CONCRETE, CONCRETE BLOCK WALL
SUBSTRATE & WOOD FRAME BUILDINGS

CORNER W/ 3 & 9B

INT. CORNER
W/ 3 & 9B

EXT. CORNER
W/ 11 & 9B

FLORIDA BUILDING CODE (HIGH & NON HIGH VELOCITY HURRICANE ZONE)

DRAWN BY: Y.M.
DATE: 7/14/23
DRAWING No. 23-111
SHEET 8 OF 28

NEWTECHWOOD DECORATIVE EUROPEAN WALL CLADDING PANEL UH46 SYSTEM

NEWTECHWOOD AMERICA INC.
15912 INTERNATIONAL PLAZA DRIVE,
HOUSTON, TEXAS 77032

REV. NO	DESCRIPTION	DATE	REV. No	DESCRIPTION	DATE
1	OLD 18-088	7/14/23	3	-	-
2	-	-	4	-	-

©2023 TILTECO, INC.

TILTECO INC.
TILLIT TESTING & ENGINEERING COMPANY
6355 N.W. 36th. St. Ste. 305, VIRGINIA GARDENS, FL 33166
Phone : (305)871-1530 Fax : (305)871-1531
CERTIFICATE OF AUTHORIZATION # 7087
WALTER A. TILLIT Jr. P.E.
FLORIDA Lic. # 44167

WALTER A. TILLIT JR. LICENSE No. 44167 STATE OF FLORIDA PROFESSIONAL ENGINEER

7/14/2023

P.E. SEAL/SIGNATURE/DATE

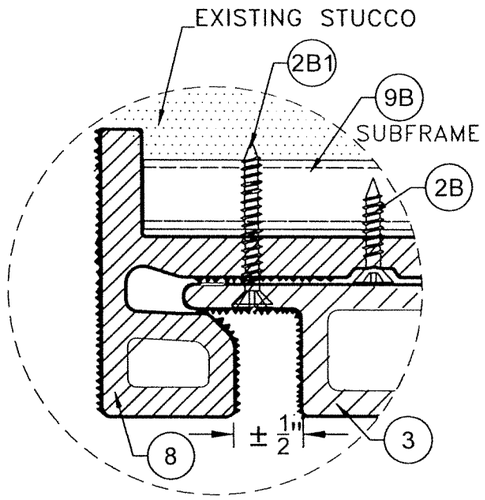

DETAIL 1
N.T.S.

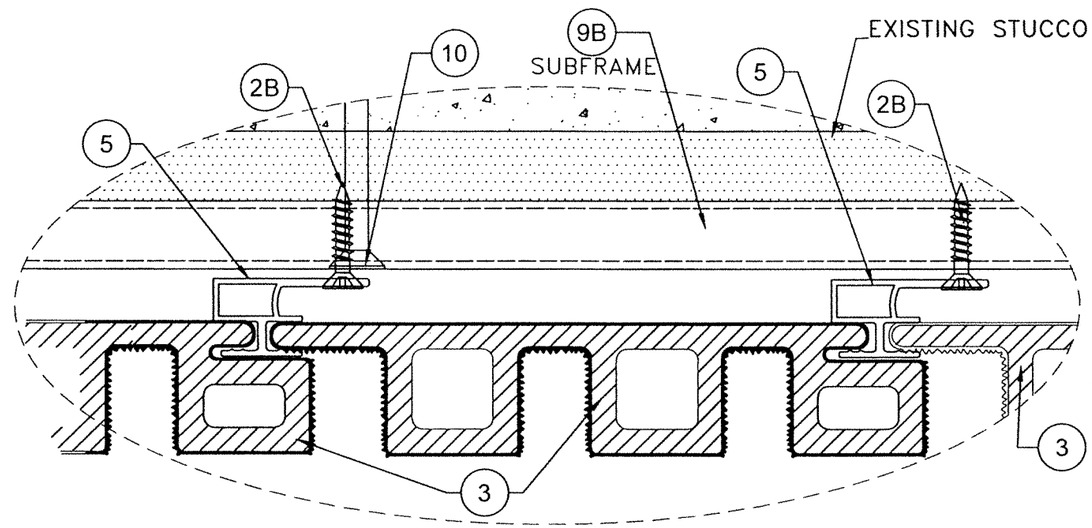

DETAIL 2
N.T.S.

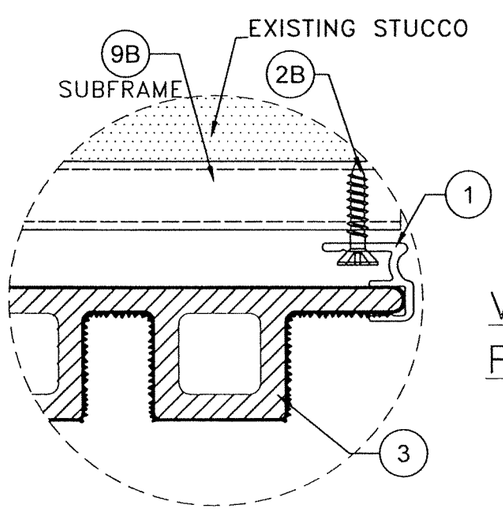

DETAIL 3
N.T.S.

VERTICAL INSTALLATION W/ 9B : ENDS
POURED CONCRETE OR CONCRETE BLOCK WALL SUBSTRATE

FLORIDA BUILDING CODE (HIGH & NON HIGH VELOCITY HURRICANE ZONE)

©2023 TILTECO, INC.

TILTECO INC.
TILJIT TESTING & ENGINEERING COMPANY
6300 N.W. 34th. Ave. Miami, Florida 33147
Phone: (305)691-5300, Fax: (305)691-1531
WALTER A. TILJIT JR., P.E.
FLORIDA LIC. # 44167

REV. NO	DESCRIPTION	DATE
1	RLS 15-088	7/11/23
2	-	-

REV. No	DESCRIPTION	DATE
3	-	-
4	-	-

NEWTECHWOOD DECORATIVE EUROPEAN WALL CLADDING PANEL UH46 SYSTEM

NEWTECHWOOD AMERICA INC.
15912 INTERNATIONAL PLAZA DRIVE,
HOUSTON, TEXAS 77032

Y.M.
DRAWN BY:

7/14/23
DATE:

23-111
DRAWING No.

SHEET 9 OF 28

WALTER A. TILJIT JR. LICENSE No. 44167 STATE OF FLORIDA PROFESSIONAL ENGINEER

7/14/2023
P.E. SEAL/SIGNATURE/DATE

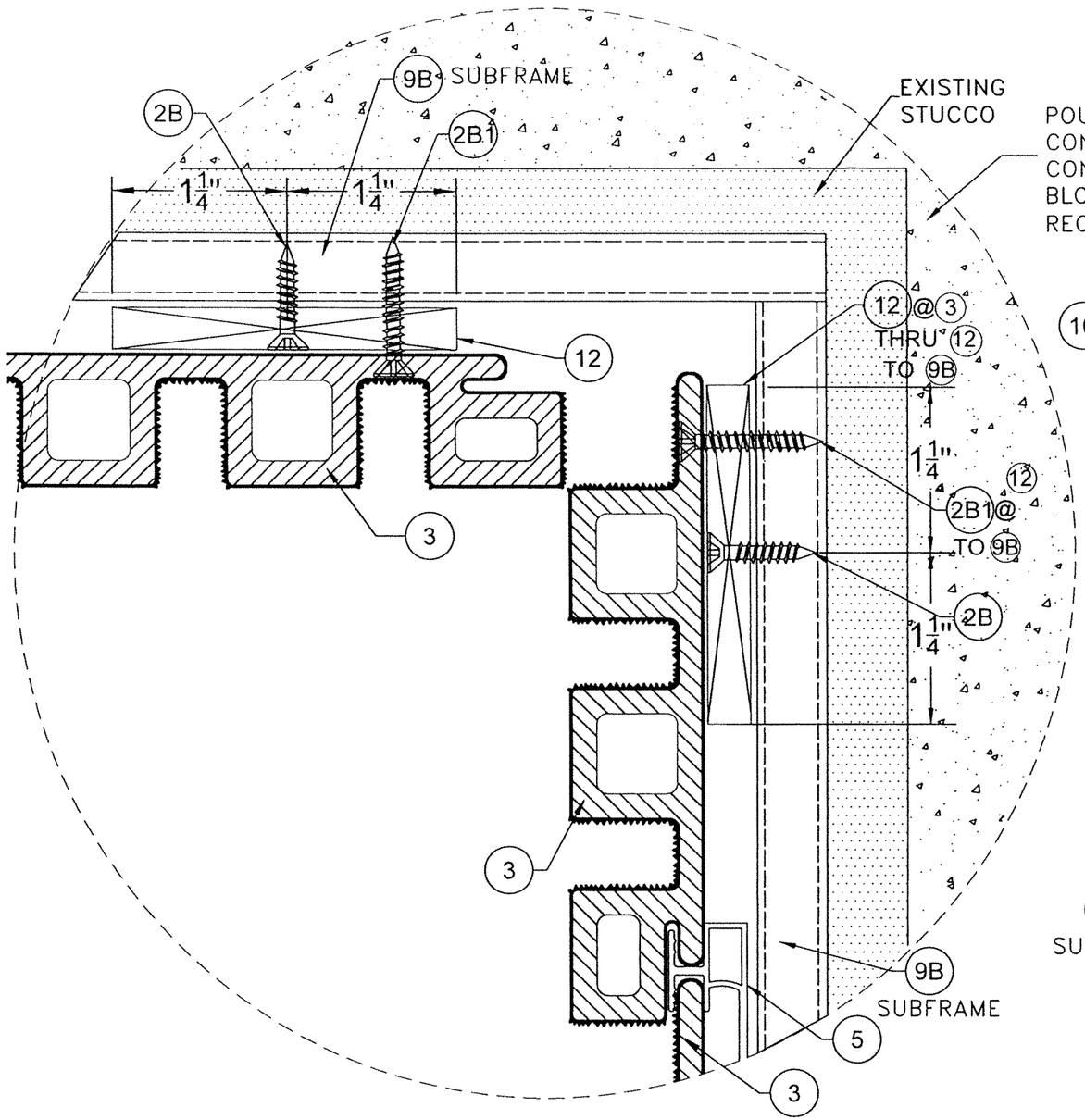

DETAIL 4
N.T.S.

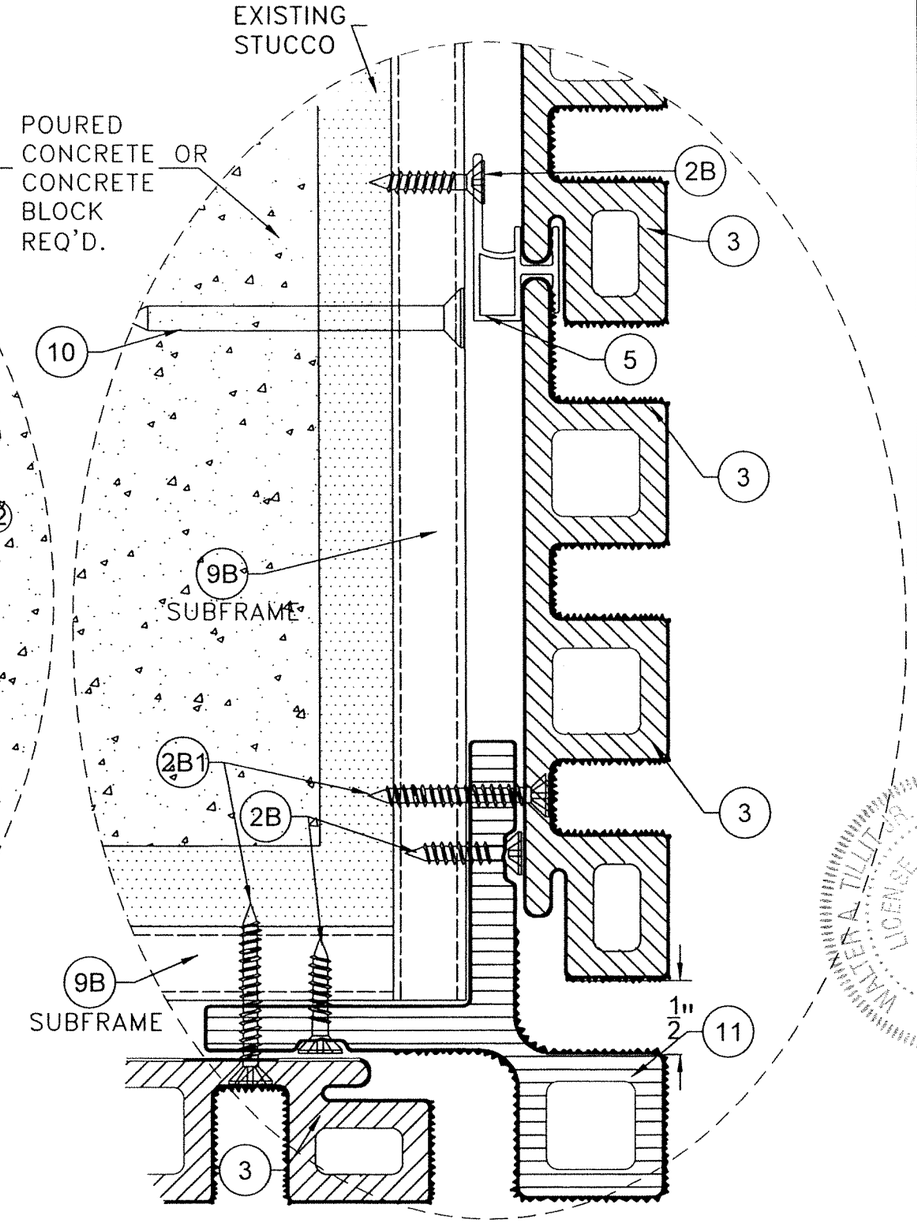

DETAIL 5
N.T.S.

VERTICAL INSTALLATION W/ 9B INTERIOR & EXTERIOR CORNER
POURED CONCRETE OR CONCRETE BLOCK WALL SUBSTRATE

FLORIDA BUILDING CODE (HIGH & NON HIGH VELOCITY HURRICANE ZONE)

NEWTECHWOOD DECORATIVE EUROPEAN WALL CLADDING PANEL UH46 SYSTEM

NEWTECHWOOD AMERICA INC.
15912 INTERNATIONAL PLAZA DRIVE,
HOUSTON, TEXAS 77032

REV. NO	DESCRIPTION	DATE
1	OLD 13-088	7/14/23
2	-	-

REV. No	DESCRIPTION	DATE
3	-	-
4	-	-

DRAWN BY: Y.M.
DATE: 7/14/23
DRAWING No. 23-111
SHEET 10 OF 28

©2023 TILTECO, INC.

TILTECO INC.
TILLIT TESTING & ENGINEERING COMPANY
6335 N.W. 36th. St. Ste. 305, VIRGINIA GARDENS, FL 33166
Phone : (305)871-1335 Fax : (305)871-1351
CA-0006719
WALTER A. TILLIT Jr. P.E.
FLORIDA Lic. # 44167

WALTER A. TILLIT Jr. LICENSE No 44167 STATE OF FLORIDA PROFESSIONAL ENGINEER

P.E SEAL/SIGNATURE/DATE
7/14/2023

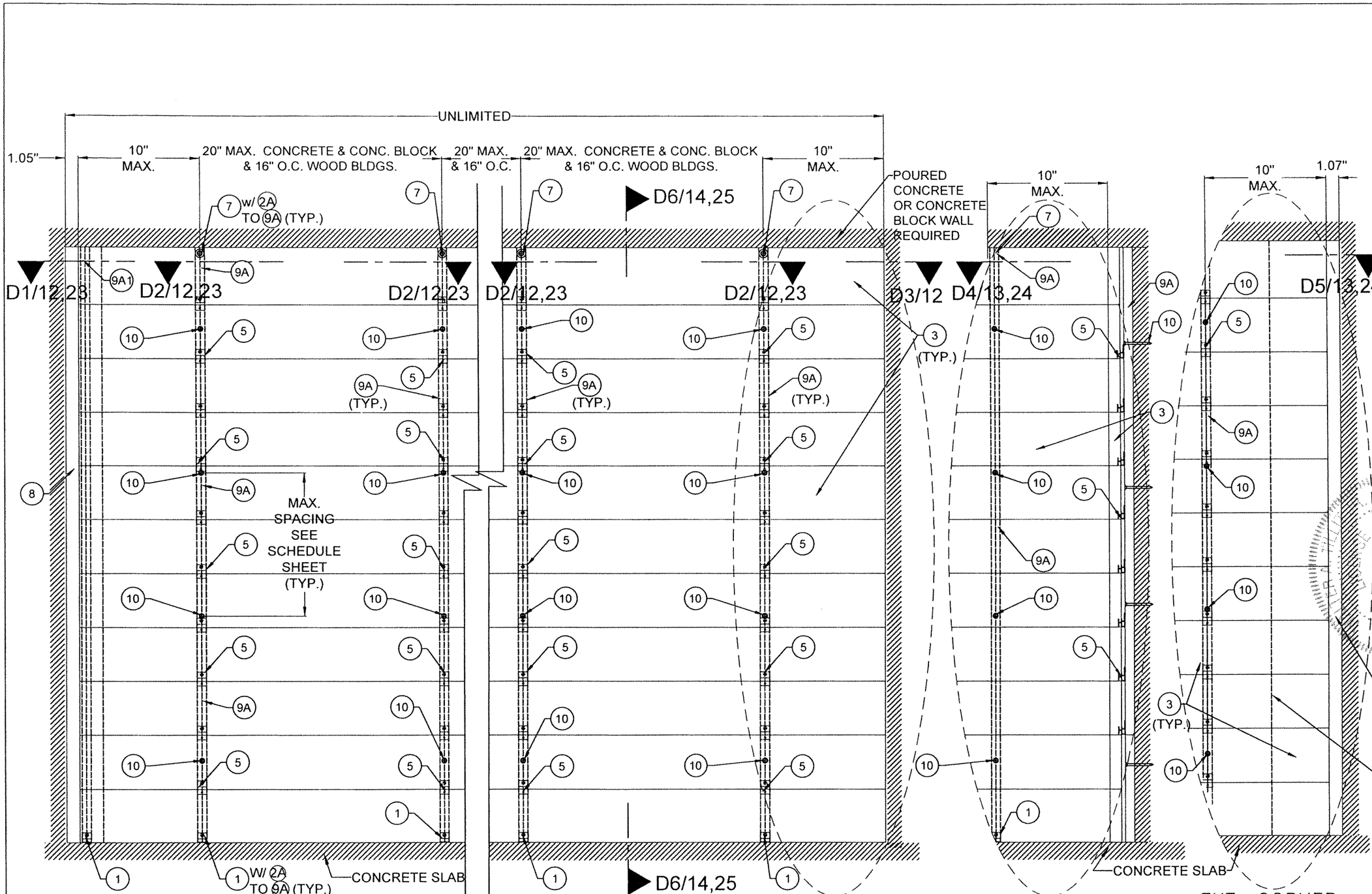

HORIZONTAL INSTALLATION EXTERIOR ELEVATION W/ 9A , 9A1
POURED CONCRETE, CONCRETE BLOCK WALL
SUBSTRATE & WOOD FRAME BUILDINGS

CORNER W/ 3 & 9A

INT. CORNER W/ 3 & 9A

EXT. CORNER W/ 11 & 9A2

FLORIDA BUILDING CODE (HIGH & NON HIGH VELOCITY HURRICANE ZONE)

NEWTECHWOOD DECORATIVE EUROPEAN WALL CLADDING PANEL UH46 SYSTEM

NEWTECHWOOD AMERICA INC.
15912 INTERNATIONAL PLAZA DRIVE,
HOUSTON, TEXAS 77032

REV. NO	DESCRIPTION	DATE	REV. No	DESCRIPTION	DATE
1	OLD 13-088	7/14/23	3	-	-
2	-	-	4	-	-

DRAWN BY: Y.M.
DATE: 7/14/23
DRAWING No. 23-111
SHEET 11 OF 28

©2023 TILTECO, INC.

TILTECO INC.
TILLIT TESTING & ENGINEERING COMPANY
6355 N.W. 36th, St. Ste. 305, VIRGINIA GARDENS, FL. 33166
Phone : (305)871-0450 Fax : (305)871-1531
CA-0007713
WALTER A. TILLIT Jr. P.E.
FLORIDA Lic. # 44167

STATE OF FLORIDA
WALTER A. TILLIT JR.
No. 44167
PROFESSIONAL ENGINEER

7/14/2023

P.E. SEAL/SIGNATURE/DATE

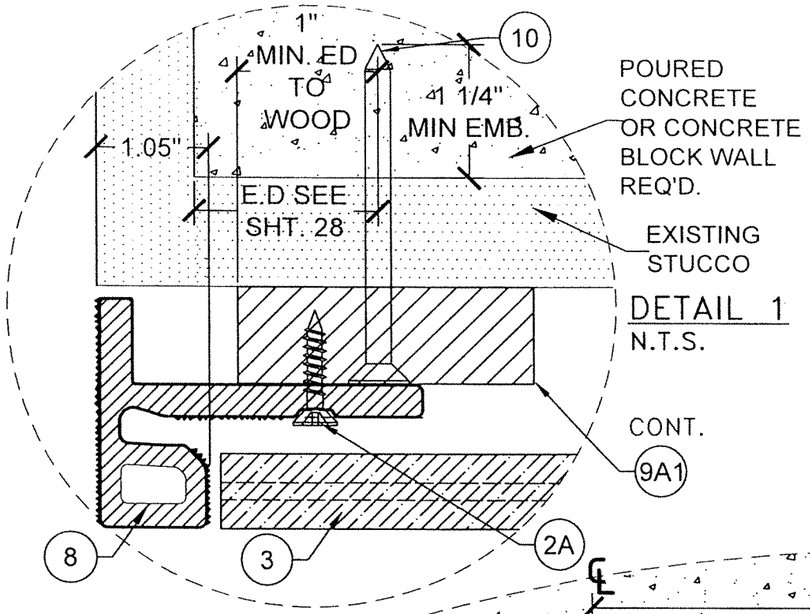

DETAIL 1
N.T.S.

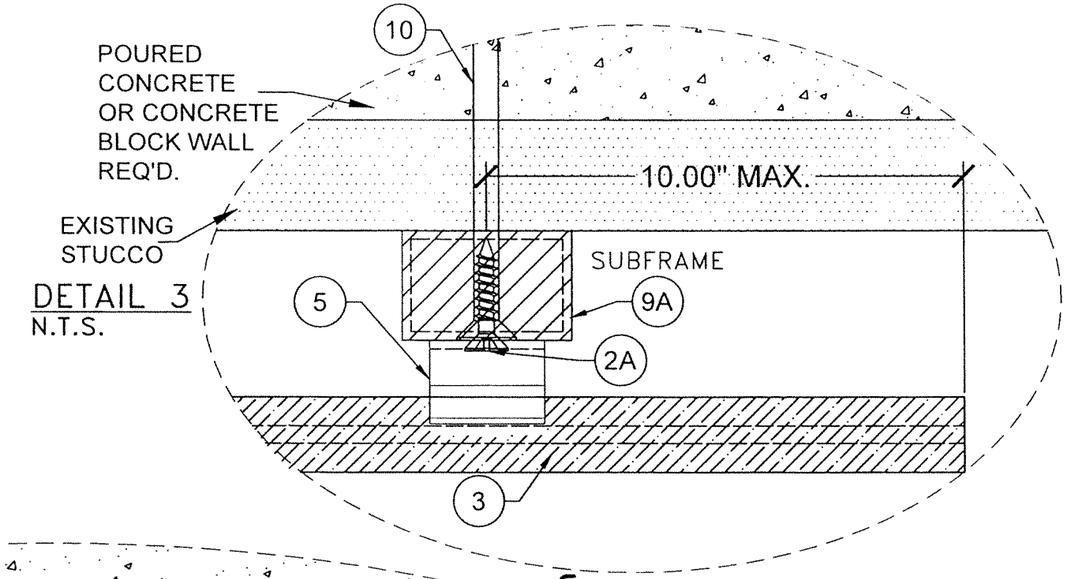

DETAIL 3
N.T.S.

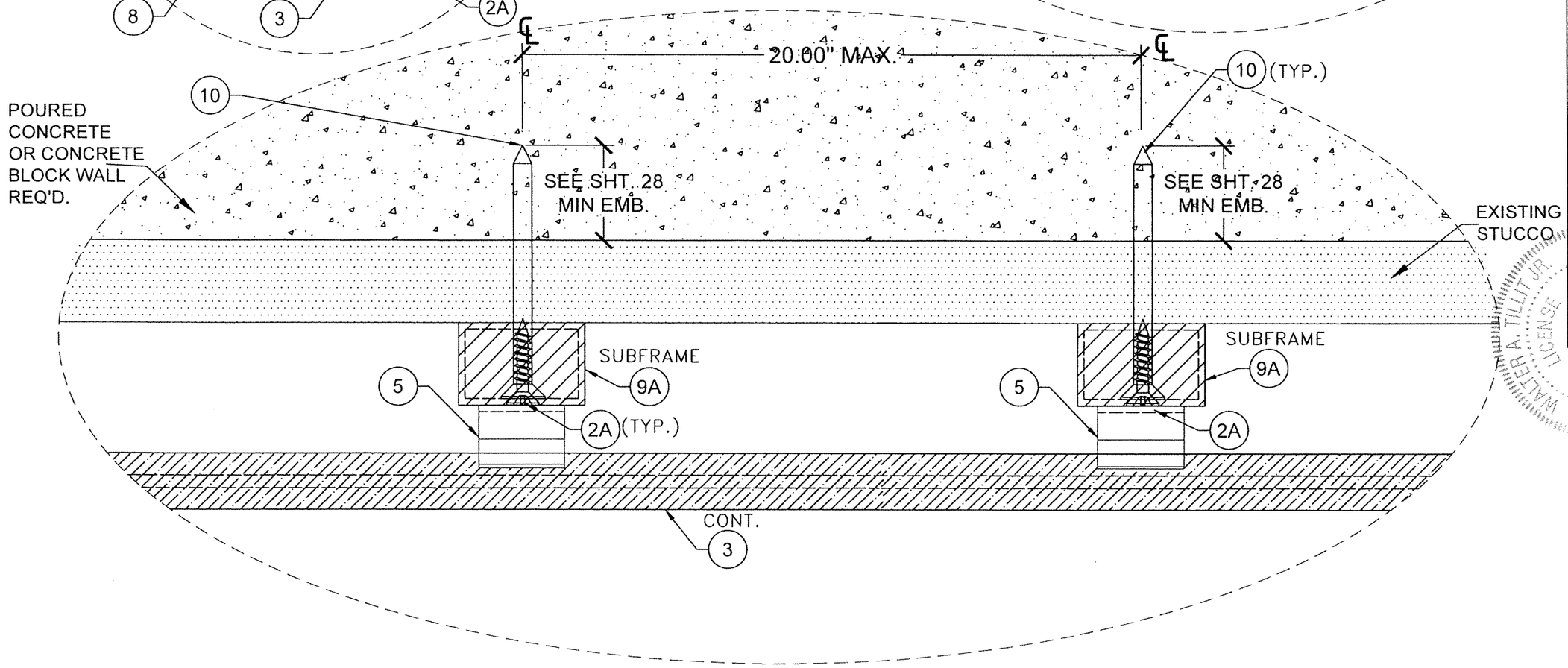

DETAIL 2
N.T.S.

HORIZONTAL INSTALLATION W/ 9A , 9A1 POURED CONCRETE OR CONCRETE BLOCK WALL SUBSTRATE

FLORIDA BUILDING CODE (HIGH & NON HIGH VELOCITY HURRICANE ZONE)

©2023 TILTECO, INC.

TILTECO INC.
TILLIT TESTING & ENGINEERING COMPANY
6355 N.W. 36th. St. Ste. 305, VIRGINIA GARDENS, FL 33166
Phone : (305)871-1530 , Fax : (305)871-1531
CERTIFICATE OF AUTHORIZATION # 00001110
WALTER A. TILLIT Jr. P.E.
FLORIDA Lic. # 44167

NEWTECHWOOD DECORATIVE EUROPEAN WALL CLADDING PANEL UH46 SYSTEM

NEWTECHWOOD AMERICA INC.
15912 INTERNATIONAL PLAZA DRIVE,
HOUSTON, TEXAS 77032

REV. NO	DESCRIPTION	DATE	REV. No	DESCRIPTION	DATE
1	OLD 15-088	7/14/23	3	-	-
2	-	-	4	-	-

DRAWN BY: Y.M.
DATE: 7/14/23
DRAWING No. 23-111
SHEET 12 OF 28

WALTER A. TILLIT JR. LICENSE No. 44167 STATE OF FLORIDA PROFESSIONAL ENGINEER

7/14/2023

P.E. SEAL/SIGNATURE/DATE

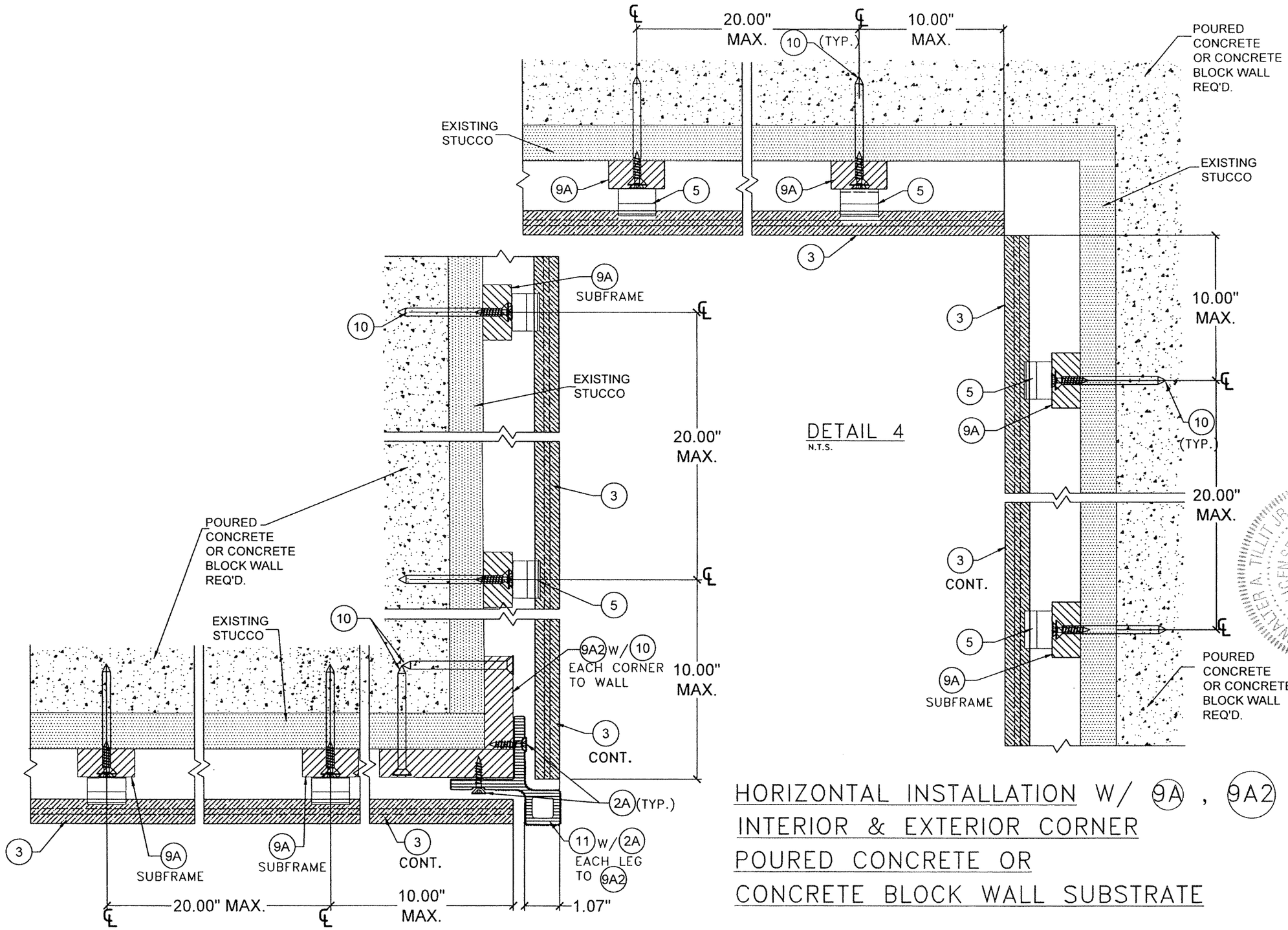

DETAIL 4
N.T.S.

DETAIL 5
N.T.S.

HORIZONTAL INSTALLATION W/ 9A , 9A2
INTERIOR & EXTERIOR CORNER
POURED CONCRETE OR
CONCRETE BLOCK WALL SUBSTRATE

FLORIDA BUILDING CODE (HIGH & NON HIGH VELOCITY HURRICANE ZONE)

©2023 TILTECO, INC.

TILTECO INC.
TILLIT TESTING & ENGINEERING COMPANY
6335 N.W. 36th, St. Ste. 305, VIRGINIA GARDENS, FL 33166
Phone : (305)871-4555 Fax : (305)871-1531
CA-0006719
WALTER A. TILLIT Jr. P.E.
FLORIDA Lic. # 44167

REV. NO	DESCRIPTION	DATE	REV. No	DESCRIPTION	DATE
1	OLD 15-485	7/14/23	3	-	-
2	-	-	4	-	-

NEWTECHWOOD DECORATIVE EUROPEAN WALL CLADDING PANEL UH46 SYSTEM

NEWTECHWOOD AMERICA INC.
15912 INTERNATIONAL PLAZA DRIVE,
HOUSTON, TEXAS 77032

DRAWN BY: Y.M.
DATE: 7/14/23
DRAWING No. 23-111
SHEET 13 of 28

WALTER A. TILLIT JR. LICENSE No. 44167 STATE OF FLORIDA PROFESSIONAL ENGINEER

P.E. SEAL/SIGNATURE/DATE

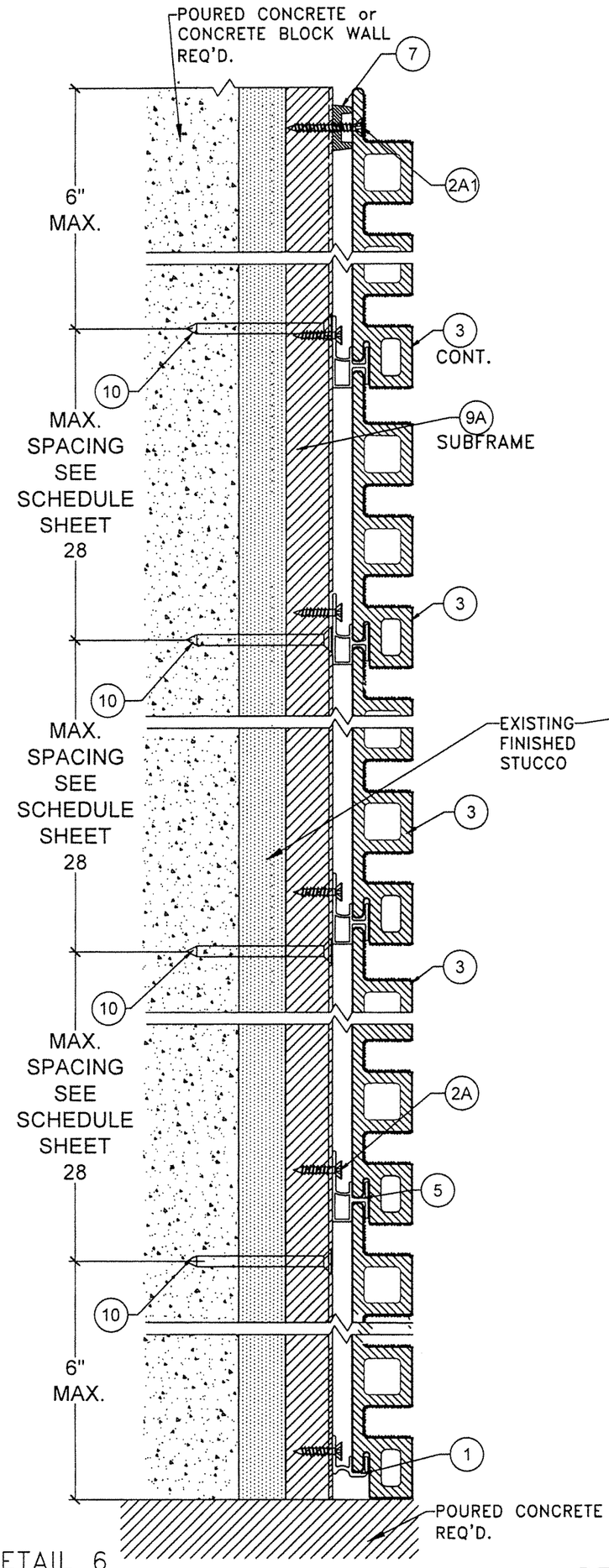

DETAIL 6

HORIZONTAL INSTALLATION W/ 9A POURED CONCRETE OR CONCRETE BLOCK SUBSTRATE

N.T.S

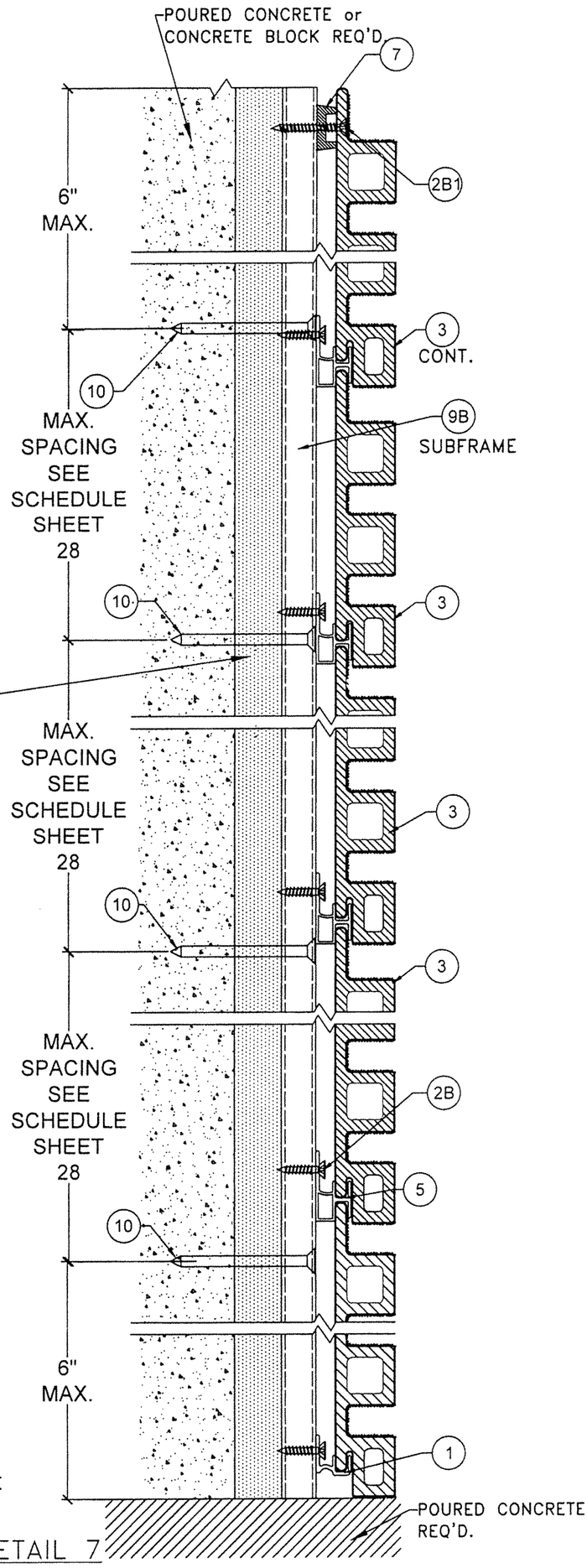

DETAIL 7

HORIZONTAL INSTALLATION W/ 9B POURED CONCRETE OR CONCRETE BLOCK SUBSTRATE

N.T.S

WALTER A. TILLIT JR. LICENSE No. 44167 STATE OF FLORIDA

7/14/2023

P.E. SEAL/SIGNATURE/DATE

FLORIDA BUILDING CODE (HIGH & NON HIGH VELOCITY HURRICANE ZONE)

©2023 TILTECO, INC.

TILTECO INC.
TILLIT TESTING & ENGINEERING COMPANY
6355 N.W. 36th. St., Ste. 305, VIRGINIA GARDENS, Fl. 33166
Phone : (305)871-1530 . Fax : (305)871-1531
CA-0006719
WALTER A. TILLIT Jr. P.E.
FLORIDA Lic. # 44167

NEWTECHWOOD DECORATIVE EUROPEAN WALL CLADDING PANEL UH46 SYSTEM

NEWTECHWOOD AMERICA INC.
15912 INTERNATIONAL PLAZA DRIVE,
HOUSTON, TEXAS 77032

REV. NO	DESCRIPTION	DATE	REV. No	DESCRIPTION	DATE
1	OLD 19-085	7/14/23	3	-	-
2	-	-	4	-	-

DRAWN BY:	Y.M.
DATE:	7/14/23
DRAWING No.	23-111
	SHEET 14 OF 28

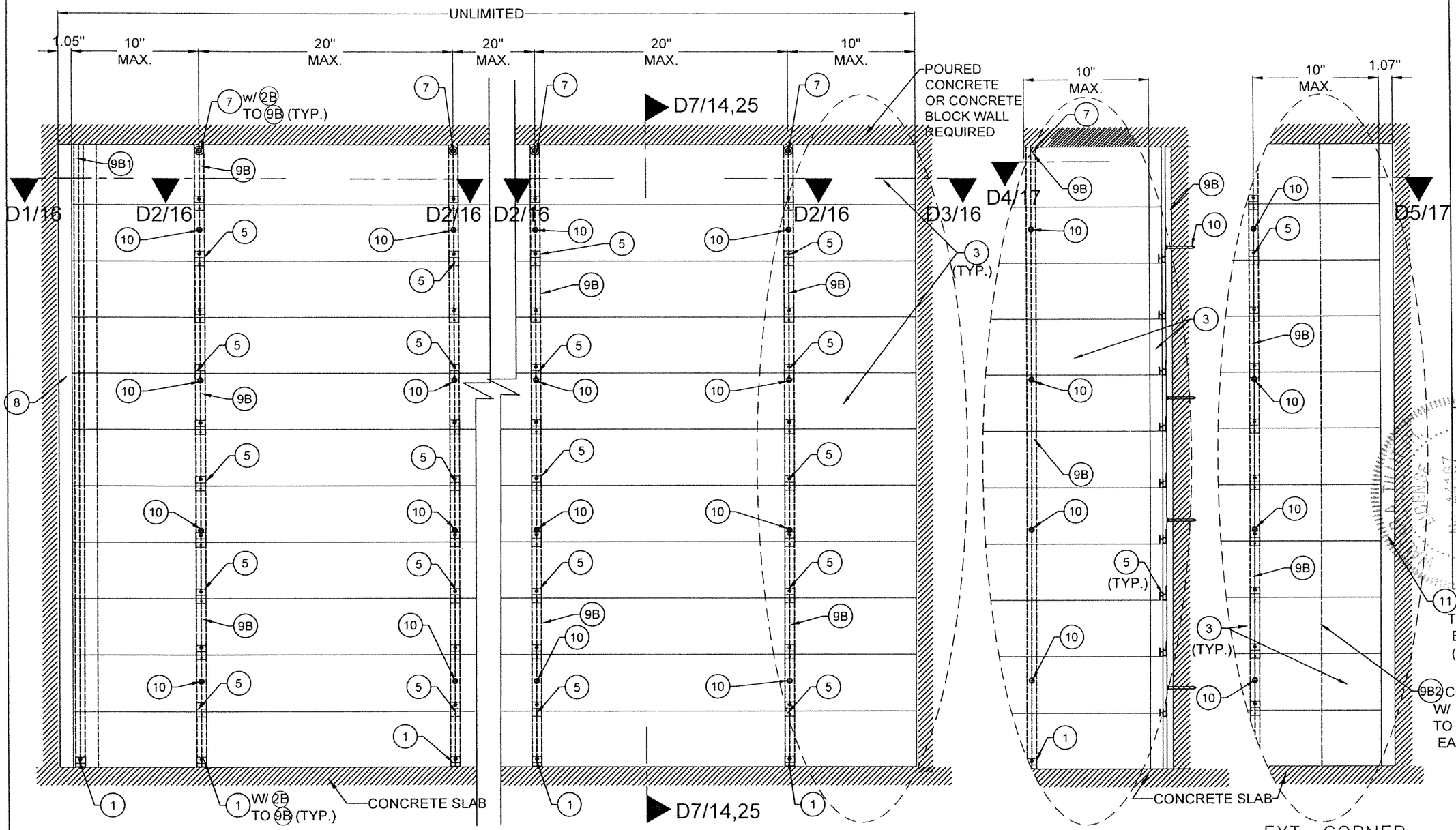

HORIZONTAL INSTALLATION EXTERIOR ELEVATION W/ 9B
POURED CONCRETE, CONCRETE BLOCK WALL
SUBSTRATE & WOOD FRAME BUILDINGS

CORNER W/ 3 & 9B

INT. CORNER W/ 3 & 9B

EXT. CORNER W/ 11 & 9B2

FLORIDA BUILDING CODE (HIGH & NON HIGH VELOCITY HURRICANE ZONE)

NEWTECHWOOD DECORATIVE EUROPEAN WALL CLADDING PANEL UH46 SYSTEM

NEWTECHWOOD AMERICA INC.
15912 INTERNATIONAL PLAZA DRIVE,
HOUSTON, TEXAS 77032

REV. NO	DESCRIPTION	DATE
1	G.S. 19-488	7/14/23
2	-	-
3	-	-
4	-	-
5	-	-

DRAWN BY: Y.M.
DATE: 7/14/23
DRAWING No. 23-111
SHEET 15 OF 28

©2023 TILTECO, INC.

TILTECO INC.
TILLIT TESTING & ENGINEERING COMPANY
6335 N.W. 36th. St., Ste. 305, VIRGINIA GARDENS, FL 33166
Phone : (305)871-1351 Fax : (305)871-1351
C.O.A. # 0006719
WALTER A. TILLIT Jr. P.E.
FLORIDA Lic. # 44167

STATE OF FLORIDA
WALTER A. TILLIT JR.
LICENSED
NO. 44167
PROFESSIONAL ENGINEER

7/14/2023

P.E. SEAL/SIGNATURE/DATE

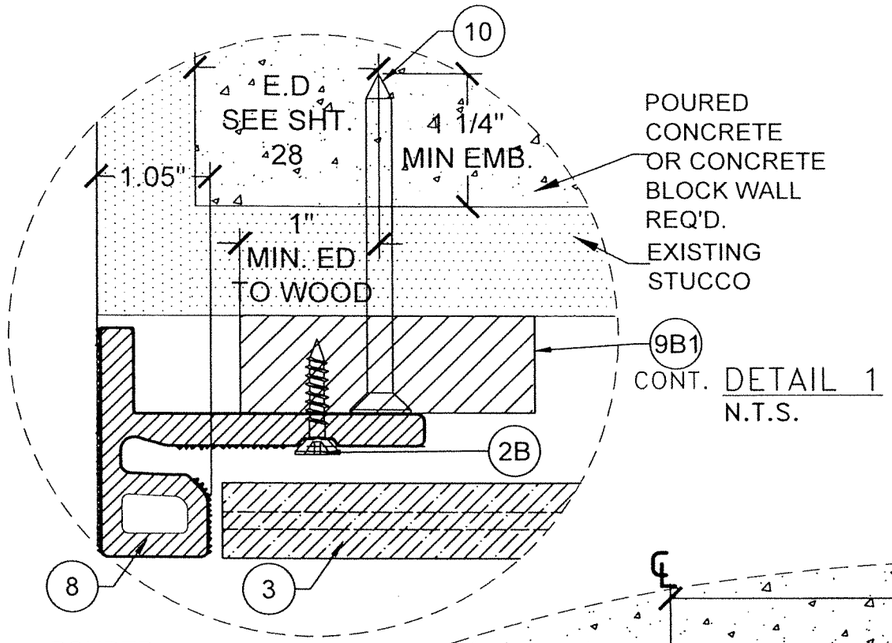

DETAIL 1
N.T.S.

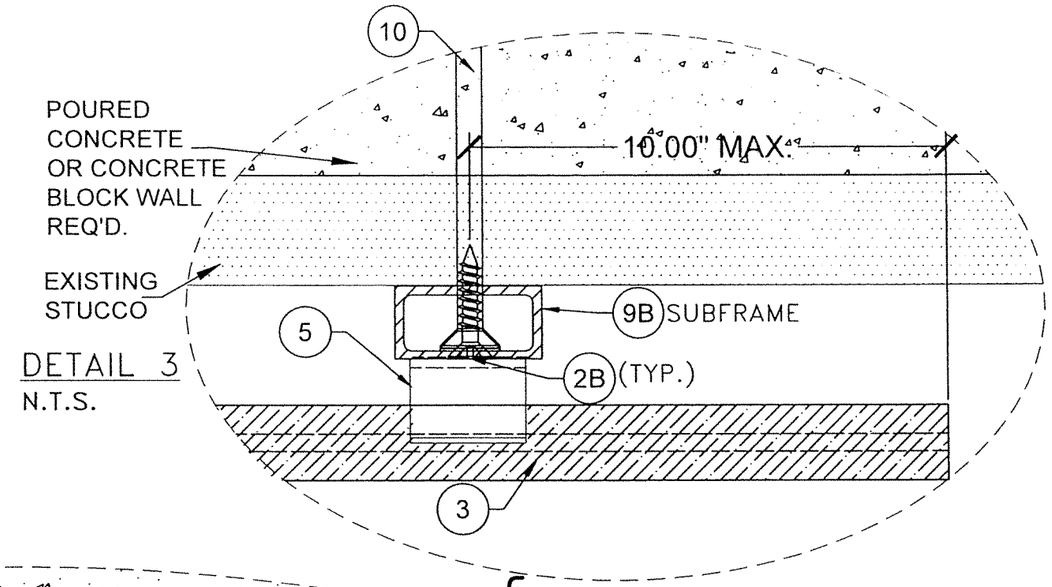

DETAIL 3
N.T.S.

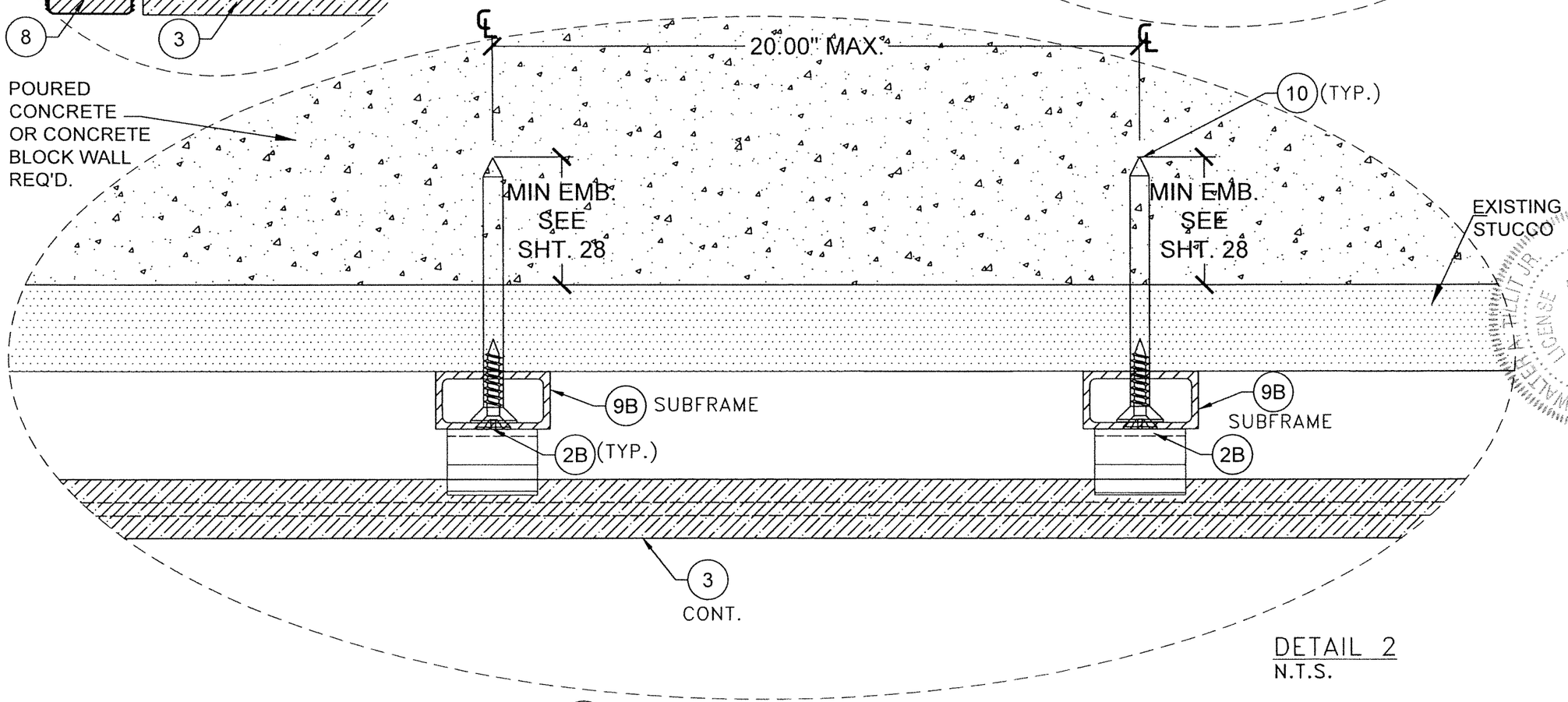

DETAIL 2
N.T.S.

HORIZONTAL INSTALLATION W/ 9B & 9B1 POURED CONCRETE OR CONCRETE BLOCK WALL SUBSTRATE

FLORIDA BUILDING CODE (HIGH & NON HIGH VELOCITY HURRICANE ZONE)

NEWTECHWOOD DECORATIVE EUROPEAN WALL CLADDING PANEL UH46 SYSTEM

NEWTECHWOOD AMERICA INC.
15912 INTERNATIONAL PLAZA DRIVE,
HOUSTON, TEXAS 77032

DRAWN BY:	DATE:	DRAWING No.
Y.M.	7/14/23	23-111

SHEET 16 OF 28

REV. NO	DESCRIPTION	DATE	REV. No	DESCRIPTION	DATE
1	G.S. 19-088	7/14/23	3	-	-
2	-	-	4	-	-

©2023 TILTECO, INC.

TILTECO INC.
TILLIT TESTING & ENGINEERING COMPANY
6350 N.W. 36th. St. Ste. 305, VIRGINIA GARDENS, FL 33166
Phone : (305)871-1331 Fax : (305)871-1331
CA-0006719
WALTER A. TILLIT Jr. P.E.
FLORIDA Lic. # 44167

WALTER A. TILLIT JR. LICENSE NO. 44167 STATE OF FLORIDA PROFESSIONAL ENGINEER

7/14/2023

P.E. SEAL/SIGNATURE/DATE

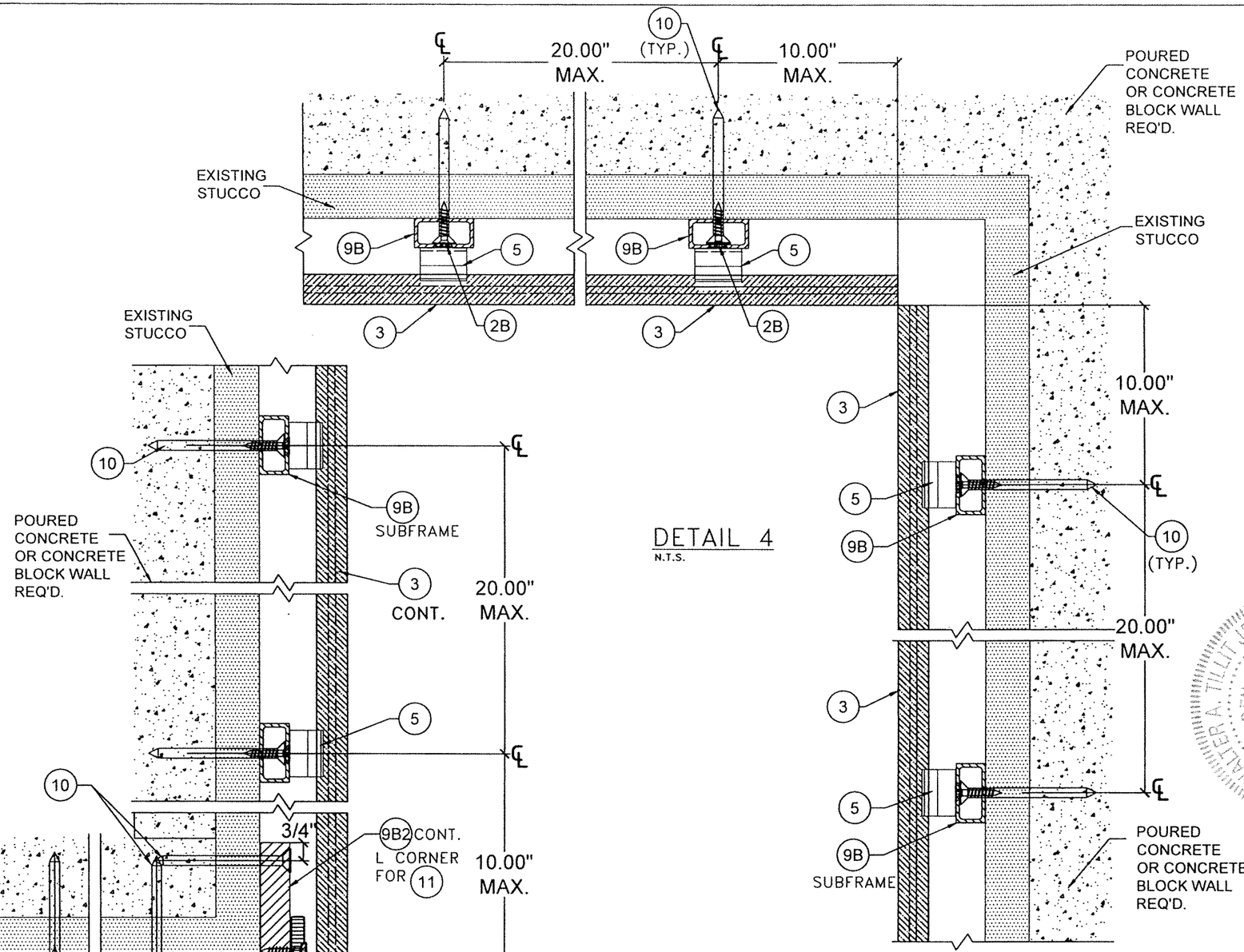

DETAIL 4
N.T.S.

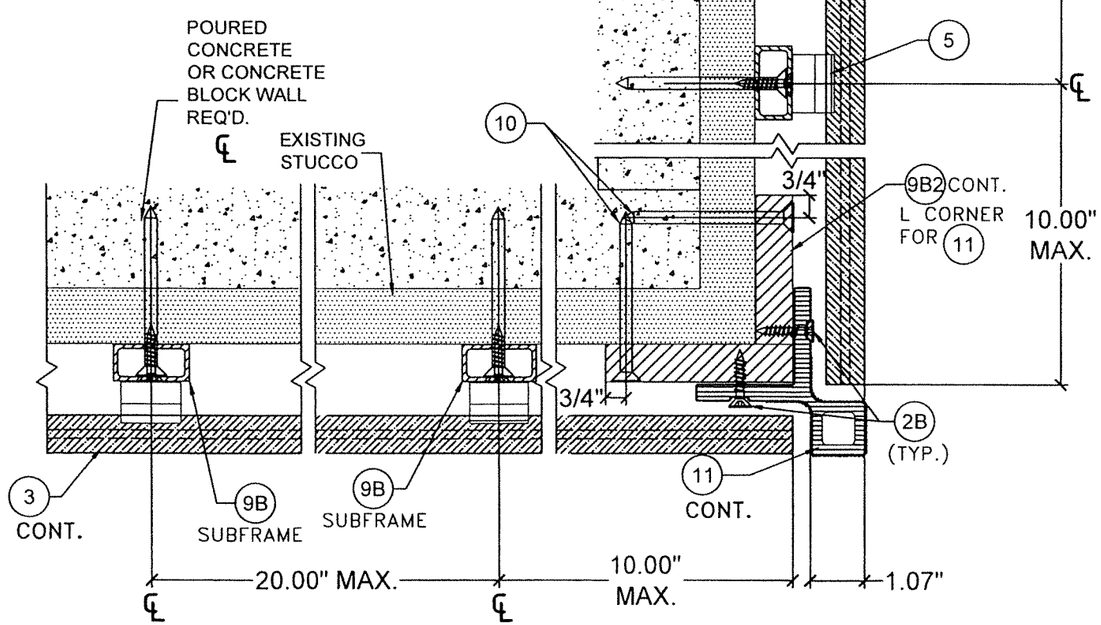

DETAIL 5
N.T.S.

HORIZONTAL INSTALLATION W/ 9B , 9B2
INTERIOR & EXTERIOR CORNER
POURED CONCRETE OR
CONCRETE BLOCK WALL SUBSTRATE

FLORIDA BUILDING CODE (HIGH & NON HIGH VELOCITY HURRICANE ZONE)

NEWTECHWOOD DECORATIVE EUROPEAN WALL CLADDING PANEL UH46 SYSTEM

NEWTECHWOOD AMERICA INC.
15912 INTERNATIONAL PLAZA DRIVE,
HOUSTON, TEXAS 77032

REV. NO	DESCRIPTION	DATE
1	OLD 15-08	7/11/23
2	-	-

REV. No	DESCRIPTION	DATE
3	-	-
4	-	-

DRAWN BY: Y.M.
DATE: 7/14/23
DRAWING No. 23-111
SHEET 17 OF 28

©2023 TILTECO, INC.

TILTECO INC.
TILLIT TESTING & ENGINEERING COMPANY
6355 N.W. 36th St., Ste. 305, VIRGINIA GARDENS, FL 33166
Phone : (305)871-1551 Fax : (305)871-1531
CA-0006719
WALTER A. TILLIT Jr., P.E.
FLORIDA Lic. # 44167

WALTER A. TILLIT JR. LICENSE No. 44167 STATE OF FLORIDA PROFESSIONAL ENGINEER

P.E. SEAL/SIGNATURE/DATE

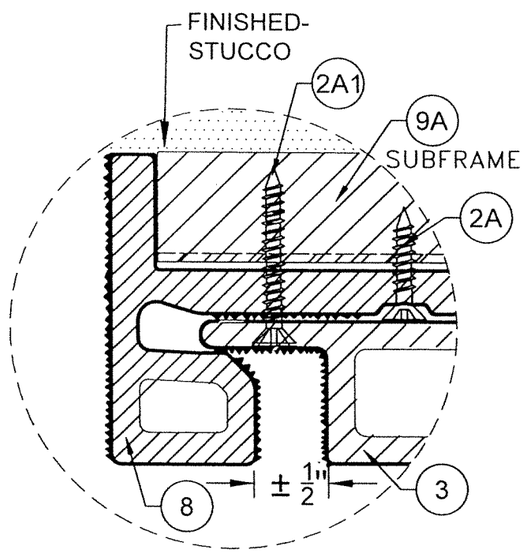

DETAIL 1
N.T.S.

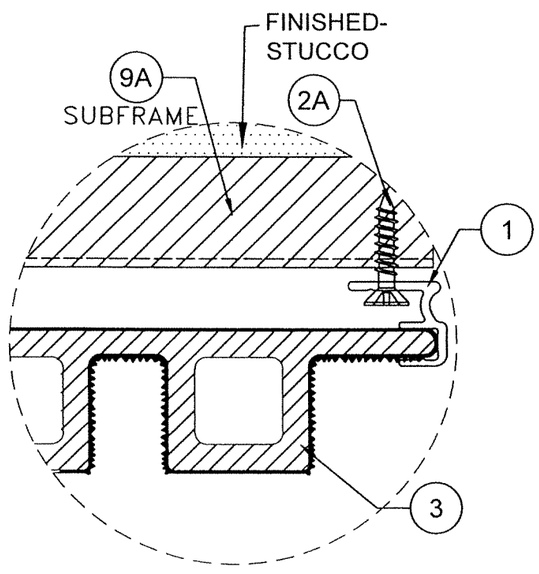

DETAIL 3
N.T.S.

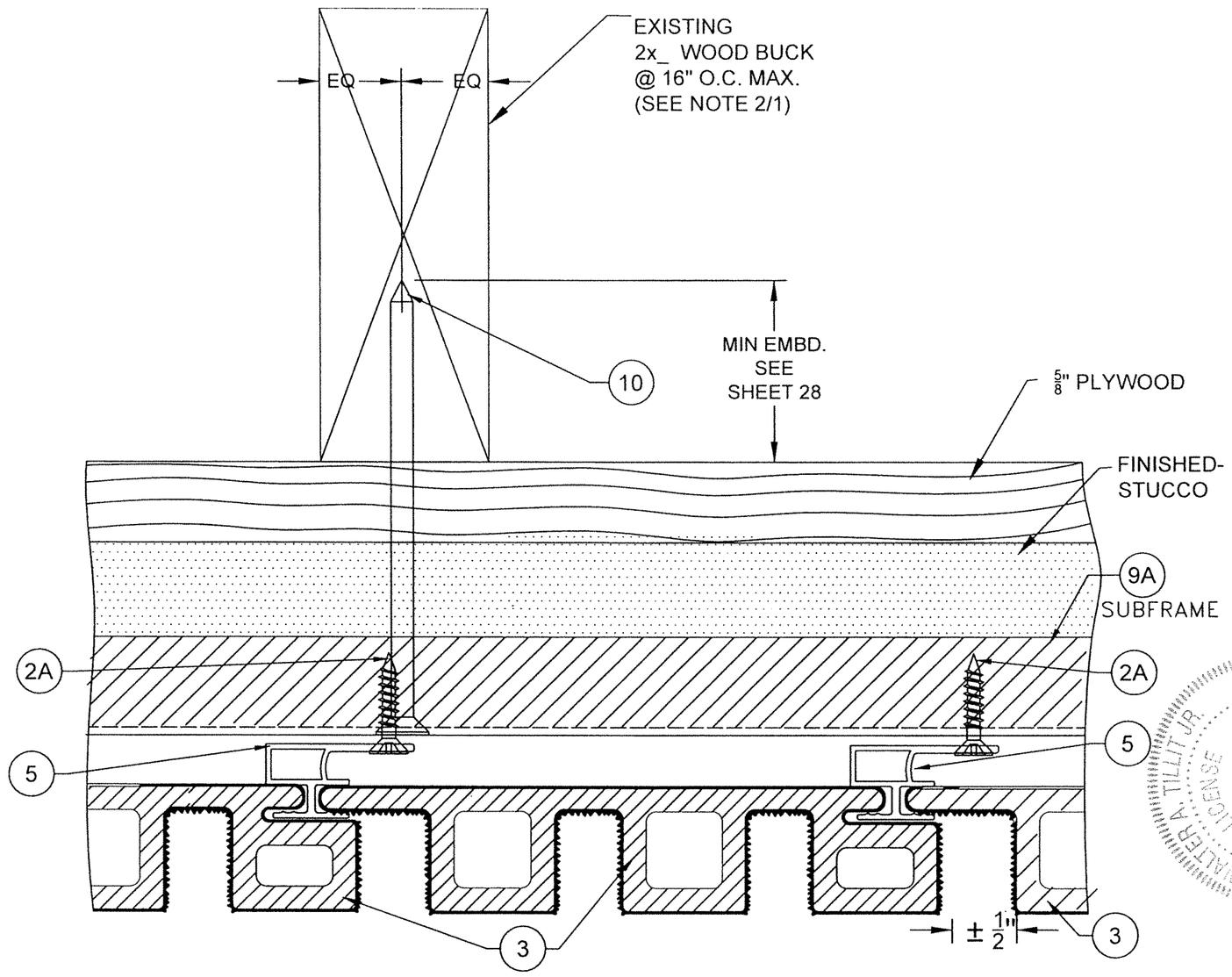

DETAIL 2
N.T.S.

VERTICAL INSTALLATION W/ 9A : ENDS
WOOD FRAME BUILDINGS

FLORIDA BUILDING CODE (HIGH & NON HIGH VELOCITY HURRICANE ZONE)

NEWTECHWOOD DECORATIVE EUROPEAN WALL CLADDING PANEL UH46 SYSTEM

NEWTECHWOOD AMERICA INC.
15912 INTERNATIONAL PLAZA DRIVE,
HOUSTON, TEXAS 77032

REV. NO	DESCRIPTION	DATE	REV. No	DESCRIPTION	DATE
1	G.D. 1-08	7/14/23	3	-	-
2	-	-	4	-	-

DRAWN BY: Y.M.
DATE: 7/14/23
DRAWING No. 23-111
SHEET 18 OF 28

©2023 TILTECO, INC.

TILTECO INC.
TILLIT TESTING & ENGINEERING COMPANY
6355 NW. 36th. St., Ste. 305, VIRGINIA GARDENS, FL 33166
Phone : (305)871-1530 Fax : (305)871-1531
CA-0006719
WALTER A. TILLIT Jr. P.E.
FLORIDA Lic. # 44167

WALTER A. TILLIT JR. No. 44167 STATE OF FLORIDA PROFESSIONAL ENGINEER

P.E. SEAL/SIGNATURE/DATE

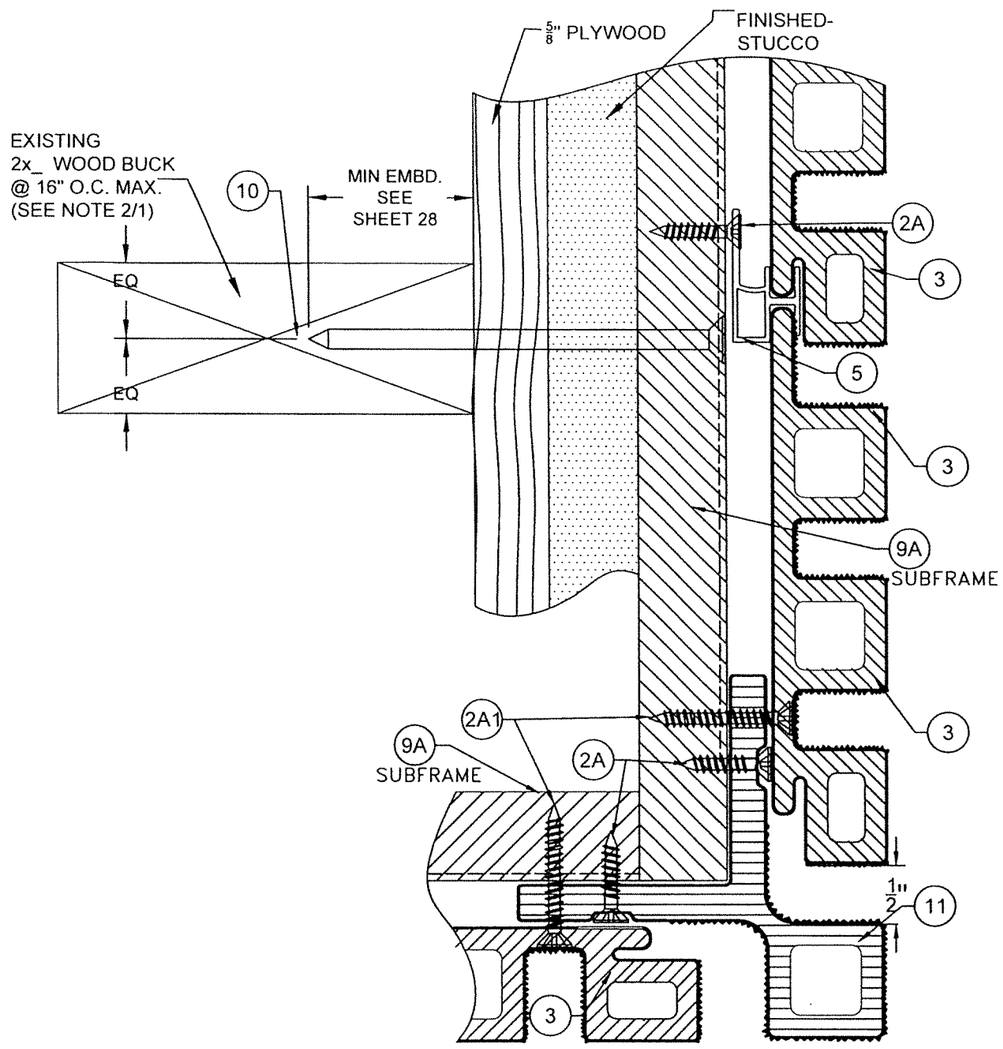

DETAIL 5
N.T.S.

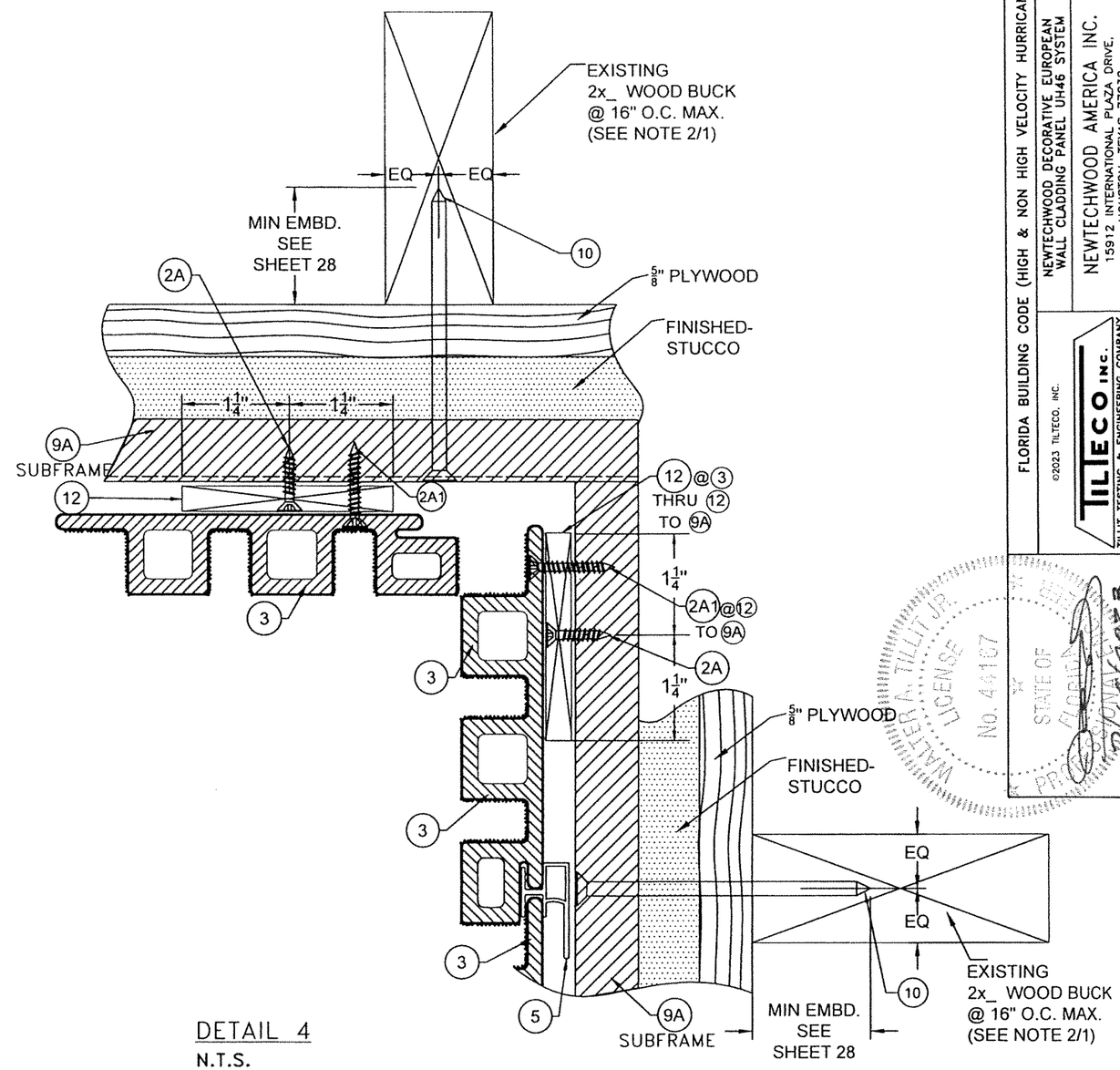

DETAIL 4
N.T.S.

VERTICAL INSTALLATION W/ 9A INTERIOR & EXTERIOR CORNER WOOD FRAME BUILDINGS

FLORIDA BUILDING CODE (HIGH & NON HIGH VELOCITY HURRICANE ZONE)

NEWTECHWOOD DECORATIVE EUROPEAN WALL CLADDING PANEL UH46 SYSTEM

NEWTECHWOOD AMERICA INC.
15912 INTERNATIONAL PLAZA DRIVE,
HOUSTON, TEXAS 77032

REV. NO	DESCRIPTION	DATE	REV. No	DESCRIPTION	DATE
1	OLD 1F-008	7/14/23	3	-	-
2	-	-	4	-	-

DRAWN BY: Y.M.
DATE: 7/14/23
DRAWING No. 23-111
SHEET 19 OF 28

©2023 TILTECO, INC.

TILTECO INC.
TILLIT TESTING & ENGINEERING COMPANY
6350 N.W. 36th. St. Ste. 300, VIRGINIA GARDENS, FL. 33166
Phone : (305)871-1535 Fax : (305)871-1531
CA-0006719
WALTER A. TILLIT Jr. P.E.
FLORIDA Lic. # 44167

WALTER A. TILLIT JR. LICENSE No. 44167 STATE OF FLORIDA PROFESSIONAL ENGINEER

P.E. SEAL/SIGNATURE/DATE

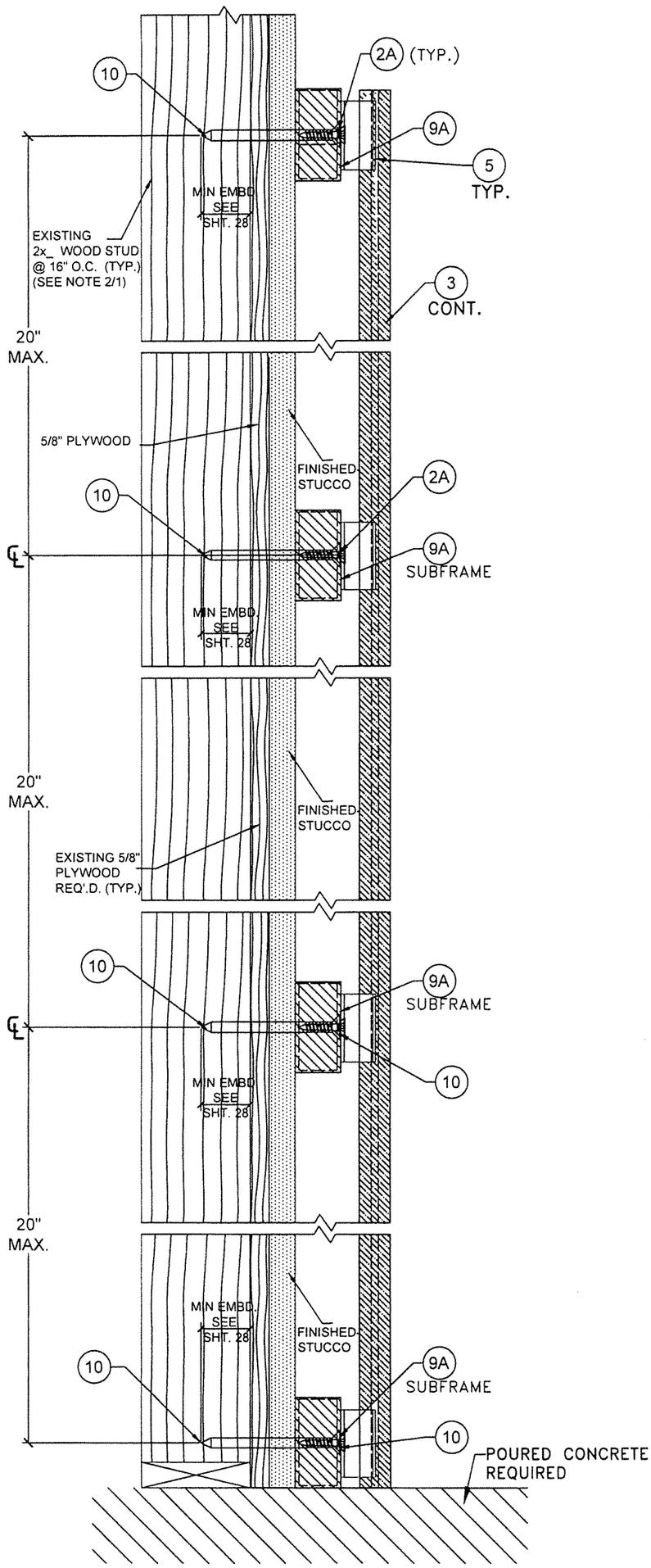

DETAIL 6

VERTICAL INSTALLATION W/ (9A)

WOOD FRAME BUILDINGS

N.T.S

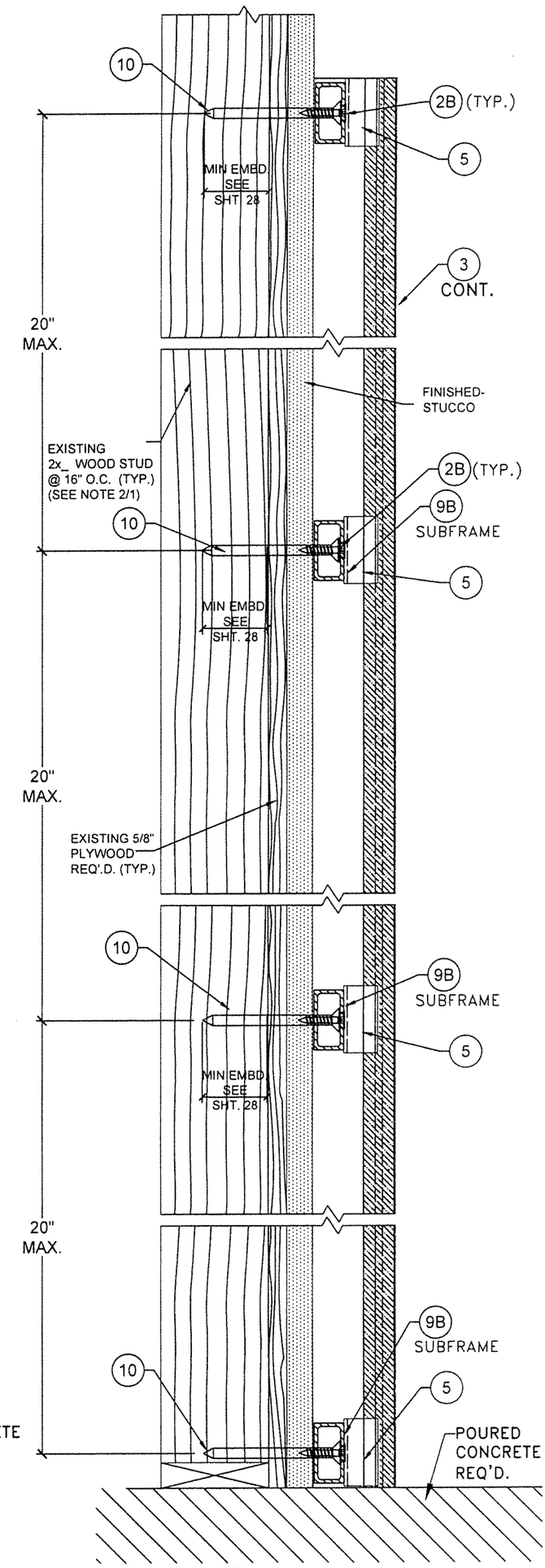

DETAIL 7

VERTICAL INSTALLATION W/ (9B)

WOOD FRAME BUILDINGS

N.T.S

WALTER A. TILLIT JR. LICENSE No. 44167 STATE OF FLORIDA PROFESSIONAL ENGINEER

3/14/2023

P.E. SEAL/SIGNATURE/DATE

FLORIDA BUILDING CODE (HIGH & NON HIGH VELOCITY HURRICANE ZONE)

©2023 TILTECO, INC.

TILTECO INC.

TILLIT TESTING & ENGINEERING COMPANY
8355 N.W. 36th. St. Ste. 300, VIRGINIA GARDENS, FL 33166
Phone : (305)871-1530 . Fax : (305)871-1531
CA-0006719
WALTER A. TILLIT Jr. P.E.
FLORIDA Lic. # 44167

NEWTECHWOOD DECORATIVE EUROPEAN WALL CLADDING PANEL UH46 SYSTEM

NEWTECHWOOD AMERICA INC.
15912 INTERNATIONAL PLAZA DRIVE,
HOUSTON, TEXAS 77032

REV. NO	DESCRIPTION	DATE	REV. No	DESCRIPTION	DATE
1	OLD 19-085	7/14/23	3	-	-
2	-	-	4	-	-

DRAWN BY:	Y.M.
DATE:	7/14/23
DRAWING No.	23-111
SHEET 20 OF 28	

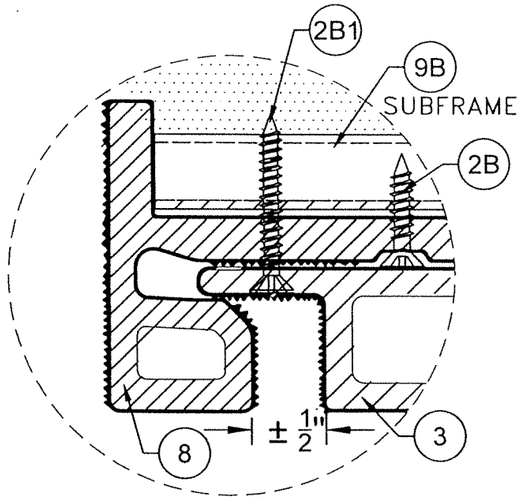

DETAIL 1
N.T.S.

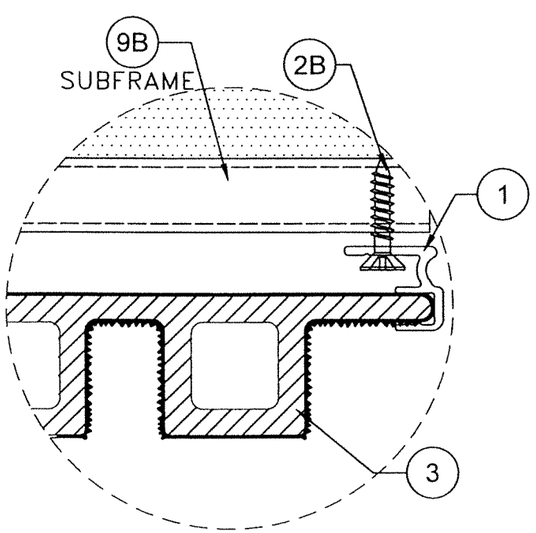

DETAIL 3
N.T.S.

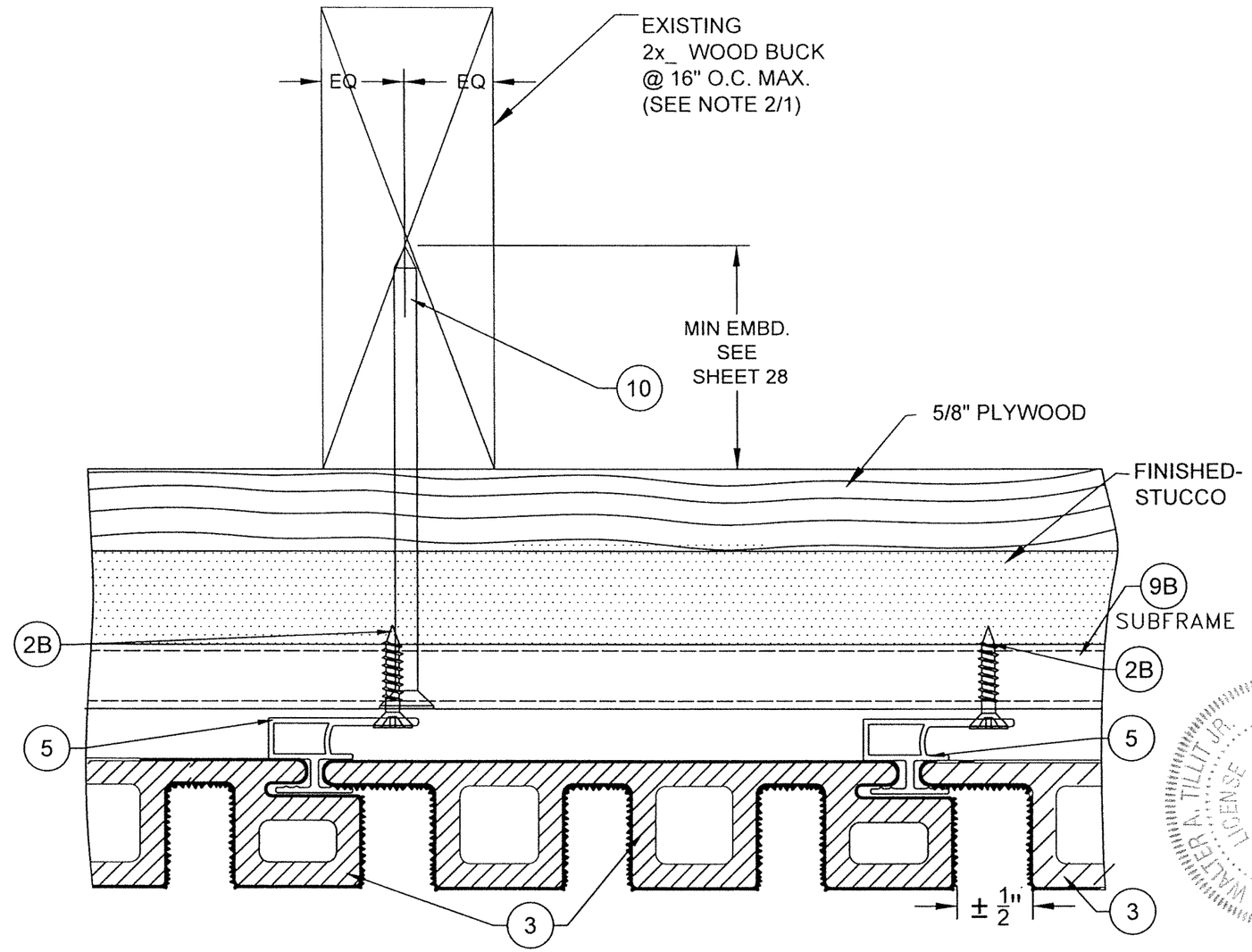

DETAIL 2
N.T.S.

VERTICAL INSTALLATION W/ 9B : ENDS
WOOD FRAME BUILDINGS

FLORIDA BUILDING CODE (HIGH & NON HIGH VELOCITY HURRICANE ZONE)

NEWTECHWOOD DECORATIVE EUROPEAN WALL CLADDING PANEL UH46 SYSTEM

NEWTECHWOOD AMERICA INC.
15912 INTERNATIONAL PLAZA DRIVE,
HOUSTON, TEXAS 77032

REV. NO	DESCRIPTION	DATE	REV. No	DESCRIPTION	DATE
1	OLD 15-488	7/14/23	3	-	-
2	-	-	4	-	-

Y.M. DRAWN BY:
7/14/23 DATE:
23-111 DRAWING No.
SHEET 21 OF 28

©2023 TILTECO, INC.

TILTECO INC.
TILLIT TESTING & ENGINEERING COMPANY
6355 N.W. 36th, St., Ste. 330, VIRGINIA GARDENS, FL 33166
Phone : (305)871-1330 Fax : (305)871-1331
CA-0006719
WALTER A. TILLIT Jr. P.E.
FLORIDA Lic. # 44167

STATE OF FLORIDA
WALTER A. TILLIT JR.
LICENSE
No. 44167
PROFESSIONAL ENGINEER

7/14/2023

P.E. SEAL/SIGNATURE/DATE

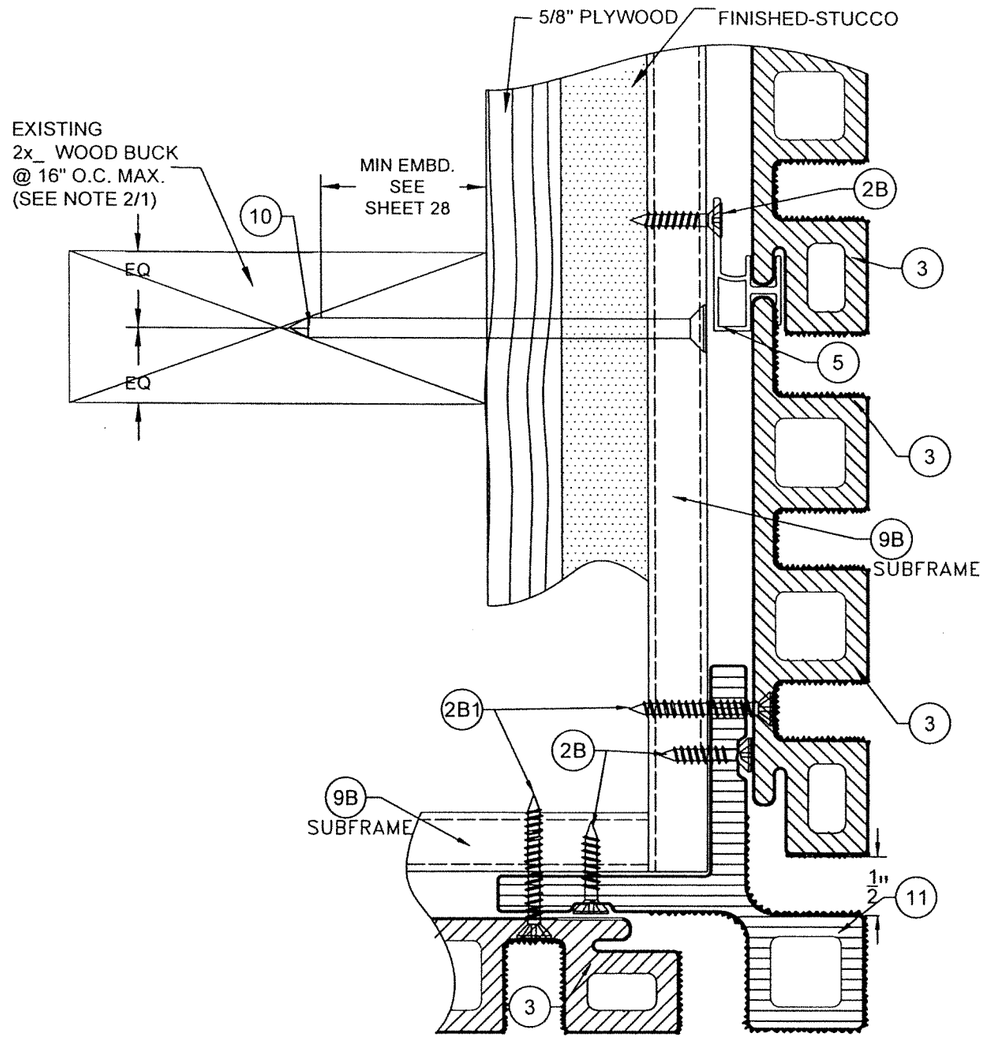

DETAIL 5
N.T.S.

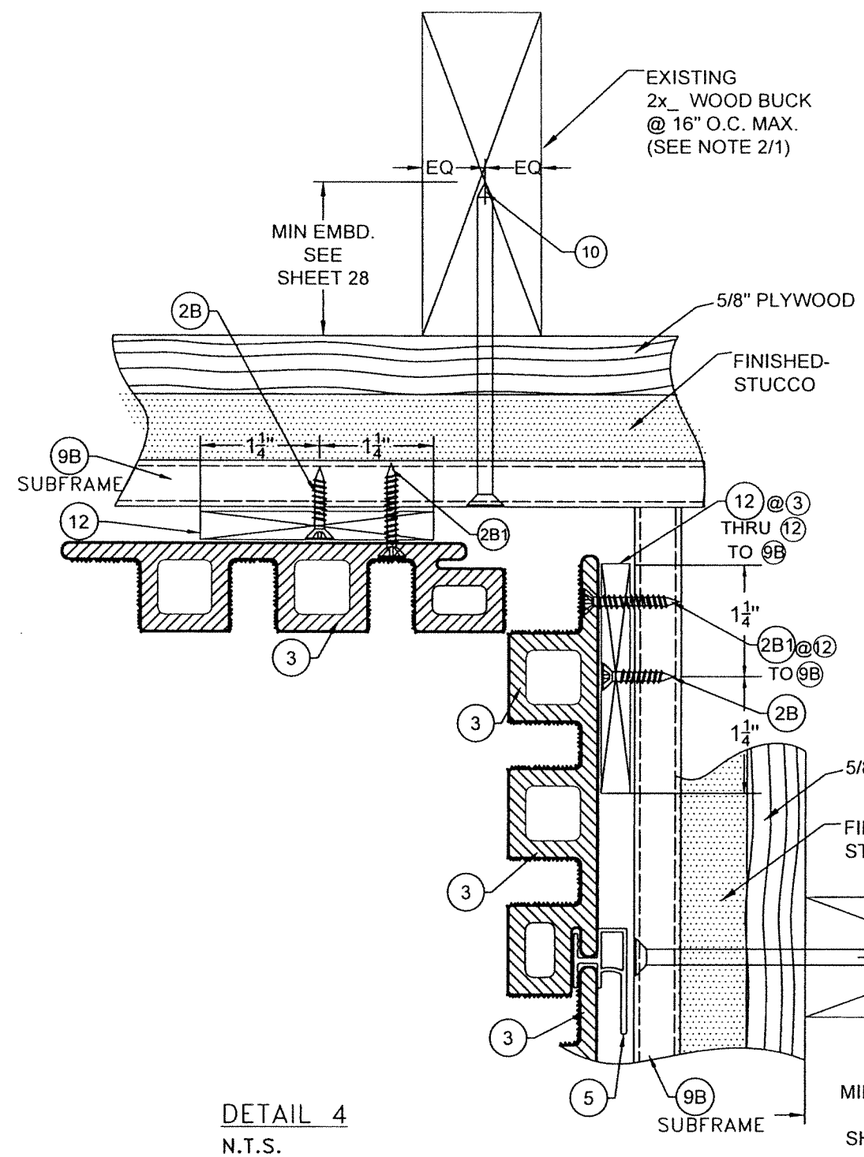

DETAIL 4
N.T.S.

VERTICAL INSTALLATION W/ 9B INTERIOR & EXTERIOR CORNER WOOD FRAME BUILDINGS

FLORIDA BUILDING CODE (HIGH & NON HIGH VELOCITY HURRICANE ZONE)

NEWTECHWOOD DECORATIVE EUROPEAN WALL CLADDING PANEL UH46 SYSTEM

NEWTECHWOOD AMERICA INC.
15912 INTERNATIONAL PLAZA DRIVE,
HOUSTON, TEXAS 77032

REV. NO	DESCRIPTION	DATE	REV. No	DESCRIPTION	DATE
1	OLD 15-088	7/14/23	4	-	-
2	-	-	5	-	-

DRAWN BY: Y.M.
DATE: 7/14/23
DRAWING No. 23-111
SHEET 22 OF 28

©2023 TILTECO, INC.

TILTECO INC.
TILLIT TESTING & ENGINEERING COMPANY
N.W. 36th. St., Ste. 350, VIRGINIA GARDENS, FL 33166
Phone : (305)871-1533 Fax : (305)871-1531
CA-0006719
WALTER A. TILLIT Jr. P.E.
FLORIDA Lic. # 44167

P.E. SEAL/SIGNATURE/DATE

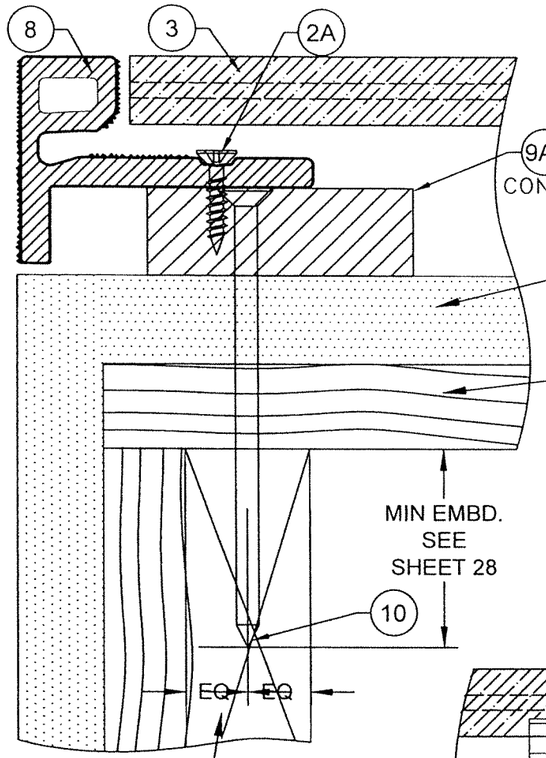

DETAIL 1
N.T.S.

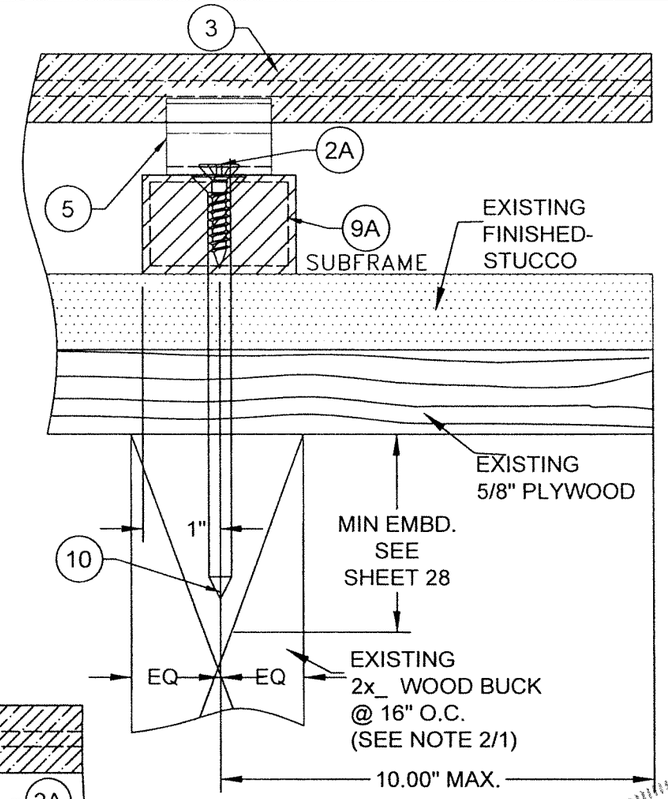

DETAIL 3
N.T.S.

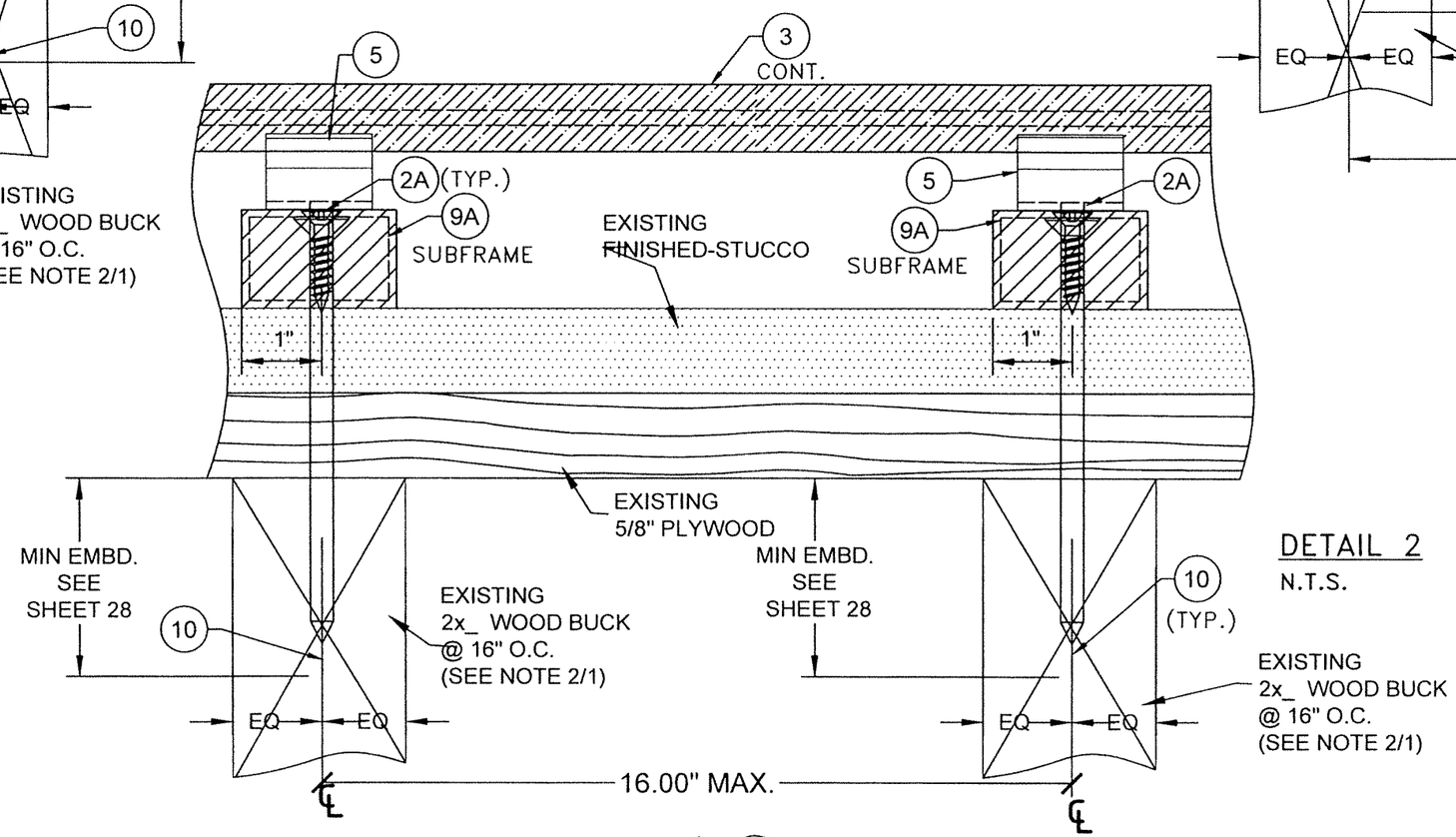

DETAIL 2
N.T.S.

HORIZONTAL INSTALLATION W/ 9A WOOD FRAME BUILDINGS

FLORIDA BUILDING CODE (HIGH & NON HIGH VELOCITY HURRICANE ZONE)

NEWTECHWOOD DECORATIVE EUROPEAN WALL CLADDING PANEL UH46 SYSTEM

NEWTECHWOOD AMERICA INC.
15912 INTERNATIONAL PLAZA DRIVE,
HOUSTON, TEXAS 77032

REV. NO	DESCRIPTION	DATE	REV. No	DESCRIPTION	DATE
1	OLD 1A-085	7/14/23	3	-	-
2	-	-	4	-	-

DRAWN BY: Y.M.
DATE: 7/14/23
DRAWING No. 23-111
SHEET 23 OF 28

©2023 TILTECO, INC.

TILTECO INC.
TILLIT TESTING & ENGINEERING COMPANY
8338 N.W. 36th, St., Ste. 300, Miami, FLORIDA, FL 33166
Phone # (305)591-1331, Fax # (305)591-1331
CA-0006719
WALTER A. TILLIT Jr. P.E.
FLORIDA Lic. # 44167

WALTER A. TILLIT JR. LICENSE No. 44167 STATE OF FLORIDA PROFESSIONAL ENGINEER
7/14/23

P.E. SEAL/SIGNATURE/DATE

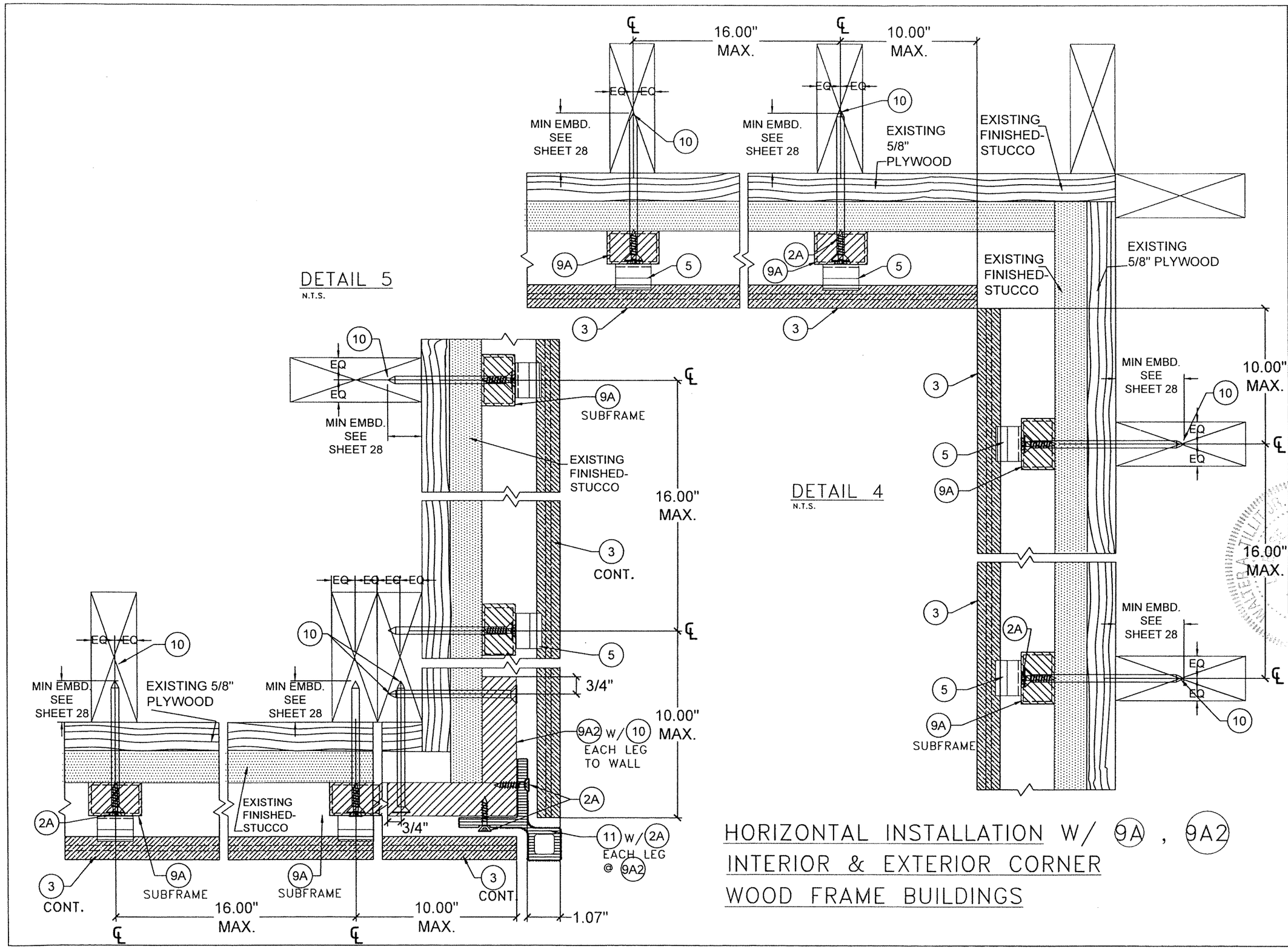

HORIZONTAL INSTALLATION W/ 9A , 9A2
INTERIOR & EXTERIOR CORNER
WOOD FRAME BUILDINGS

FLORIDA BUILDING CODE (HIGH & NON HIGH VELOCITY HURRICANE ZONE)

NEWTECHWOOD DECORATIVE EUROPEAN WALL CLADDING PANEL UH46 SYSTEM

NEWTECHWOOD AMERICA INC.
15912 INTERNATIONAL PLAZA DRIVE,
HOUSTON, TEXAS 77032

REV. NO	DESCRIPTION	DATE	REV. No	DESCRIPTION	DATE
1	OLD 15-088	7/14/23	3	-	-
2	-	-	4	-	-

DRAWN BY: Y.M.
DATE: 7/14/23
DRAWING No. 23-111
SHEET 24 OF 28

©2023 TILTECO, INC.

TILTECO INC.
TILLIT TESTING & ENGINEERING COMPANY
6355 N.W. 36th. St., Ste. 320, VIRGINIA GARDENS, FL 33166
Phone : (305)871-1530 Fax : (305)871-1531
CA-0006719
WALTER A. TILLIT Jr. P.E.
FLORIDA Lic. # 44167

P.E. SEAL/SIGNATURE/DATE
7/14/2023

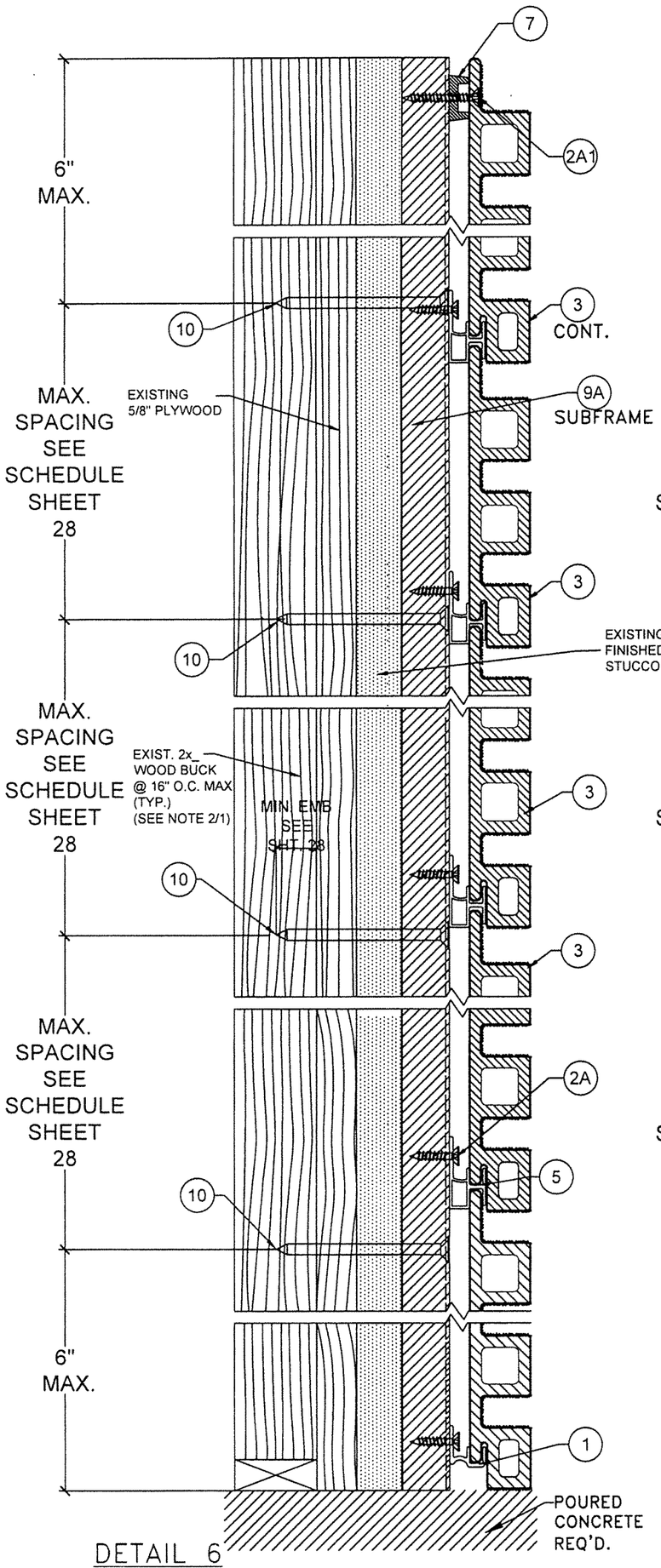

DETAIL 6

HORIZONTAL INSTALLATION W/ 9A POURED CONCRETE OR CONCRETE BLOCK SUBSTRATE

N.T.S

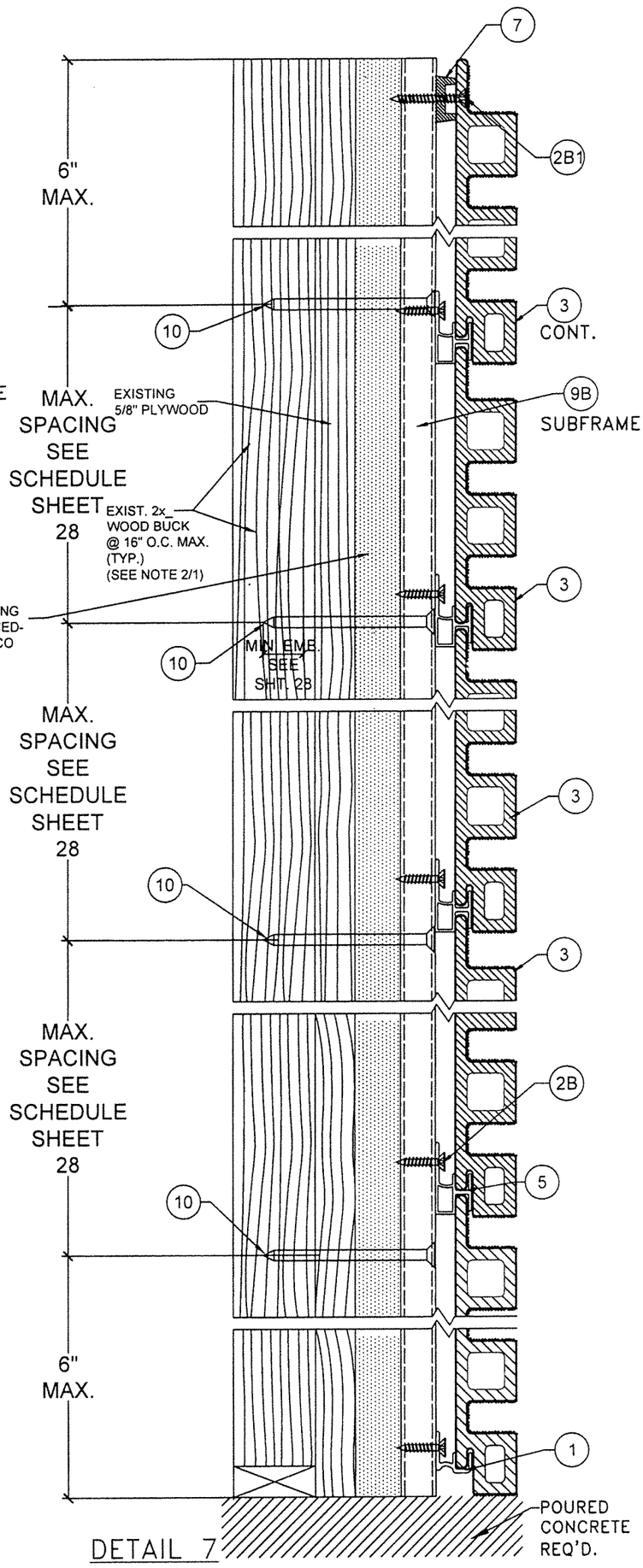

DETAIL 7

HORIZONTAL INSTALLATION W/ 9B POURED CONCRETE OR CONCRETE BLOCK SUBSTRATE

N.T.S

WALTER A. TILLIT JR. LICENSE No. 44167 STATE OF FLORIDA PROFESSIONAL ENGINEER

7/14/2023

P.E. SEAL/SIGNATURE/DATE

FLORIDA BUILDING CODE (HIGH & NON HIGH VELOCITY HURRICANE ZONE)

©2023 TILTECO, INC.

TILTECO INC.

TILLIT TESTING & ENGINEERING COMPANY
8355 N.W. 36th. St., Ste. 305, VIRGINIA GARDENS, FL 33166
Phone : (305)871-1530 , Fax : (305)871-1531
CA-0006719
WALTER A. TILLIT Jr. P.E.
FLORIDA Lic. # 44167

NEWTECHWOOD DECORATIVE EUROPEAN WALL CLADDING PANEL UH46 SYSTEM

NEWTECHWOOD AMERICA INC.
15912 INTERNATIONAL PLAZA DRIVE,
HOUSTON, TEXAS 77032

REV. NO	DESCRIPTION	DATE	REV. No	DESCRIPTION	DATE
1	OLD 19-085	7/14/23	3	-	-
2	-	-	4	-	-

DRAWN BY:	Y.M.
DATE:	7/14/23
DRAWING No.	23-111
SHEET	25 OF 28

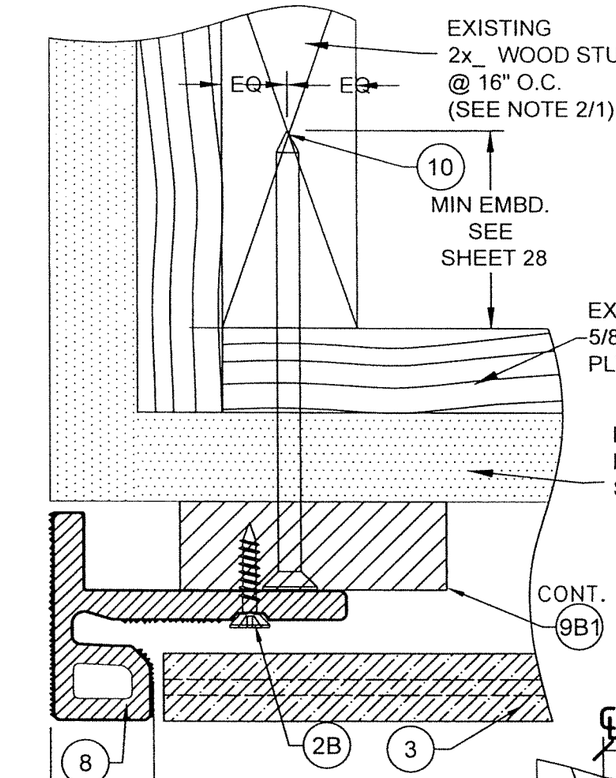

DETAIL 1
N.T.S.

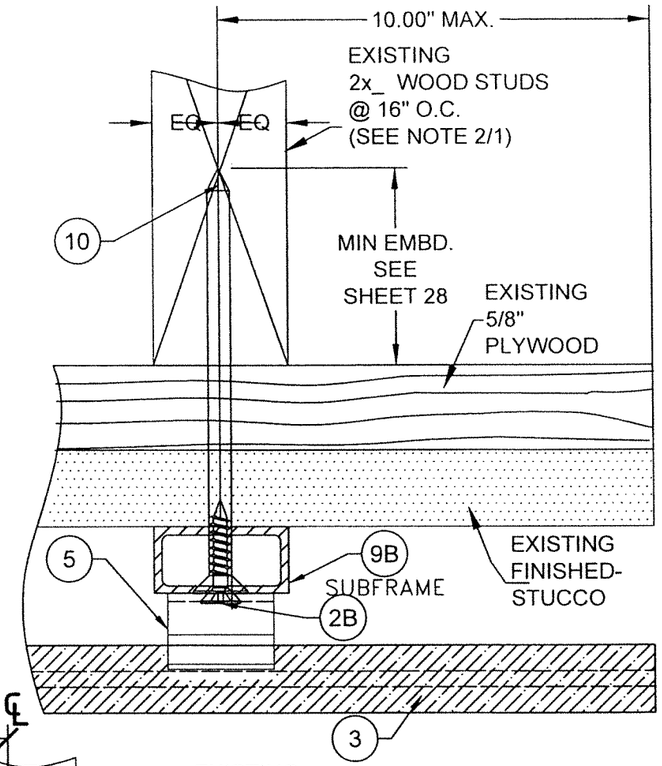

DETAIL 3
N.T.S.

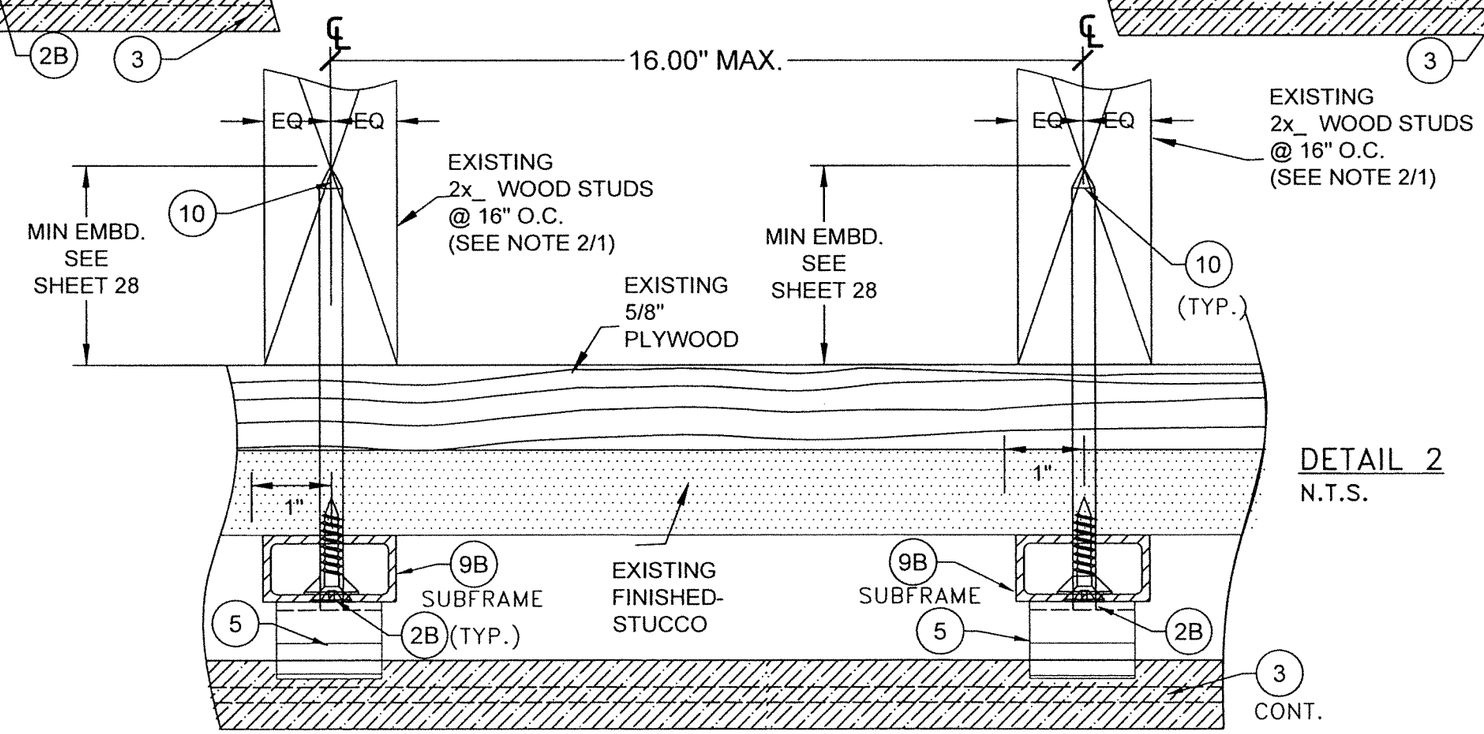

DETAIL 2
N.T.S.

HORIZONTAL INSTALLATION W/ 9B WOOD FRAME BUILDINGS

FLORIDA BUILDING CODE (HIGH & NON HIGH VELOCITY HURRICANE ZONE)

©2023 TILTECO, INC.

TILTECO INC.
TILLIT TESTING & ENGINEERING COMPANY
6355 N.W. 36th. St., Ste. 300, VIRGINIA GARDENS, FL 33166
Phone : (305)871-1535 Fax : (305)871-1531
CA-0006719
WALTER A. TILLIT Jr. P.E.
FLORIDA Lic. # 44167

NEWTECHWOOD DECORATIVE EUROPEAN WALL CLADDING PANEL UH46 SYSTEM

NEWTECHWOOD AMERICA INC.
15912 INTERNATIONAL PLAZA DRIVE,
HOUSTON, TEXAS 77032

REV. NO	DESCRIPTION	DATE	REV. No	DESCRIPTION	DATE
1	OLD 15-465	7/14/23	3	-	-
2	-	-	4	-	-

Y.M.
DRAWN BY:
7/14/23
DATE:
23-111
DRAWING No.
SHEET 26 OF 28

WALTER A. TILLIT JR. LICENSE No. 44167 STATE OF FLORIDA PROFESSIONAL ENGINEER

P.E. SEAL/SIGNATURE/DATE

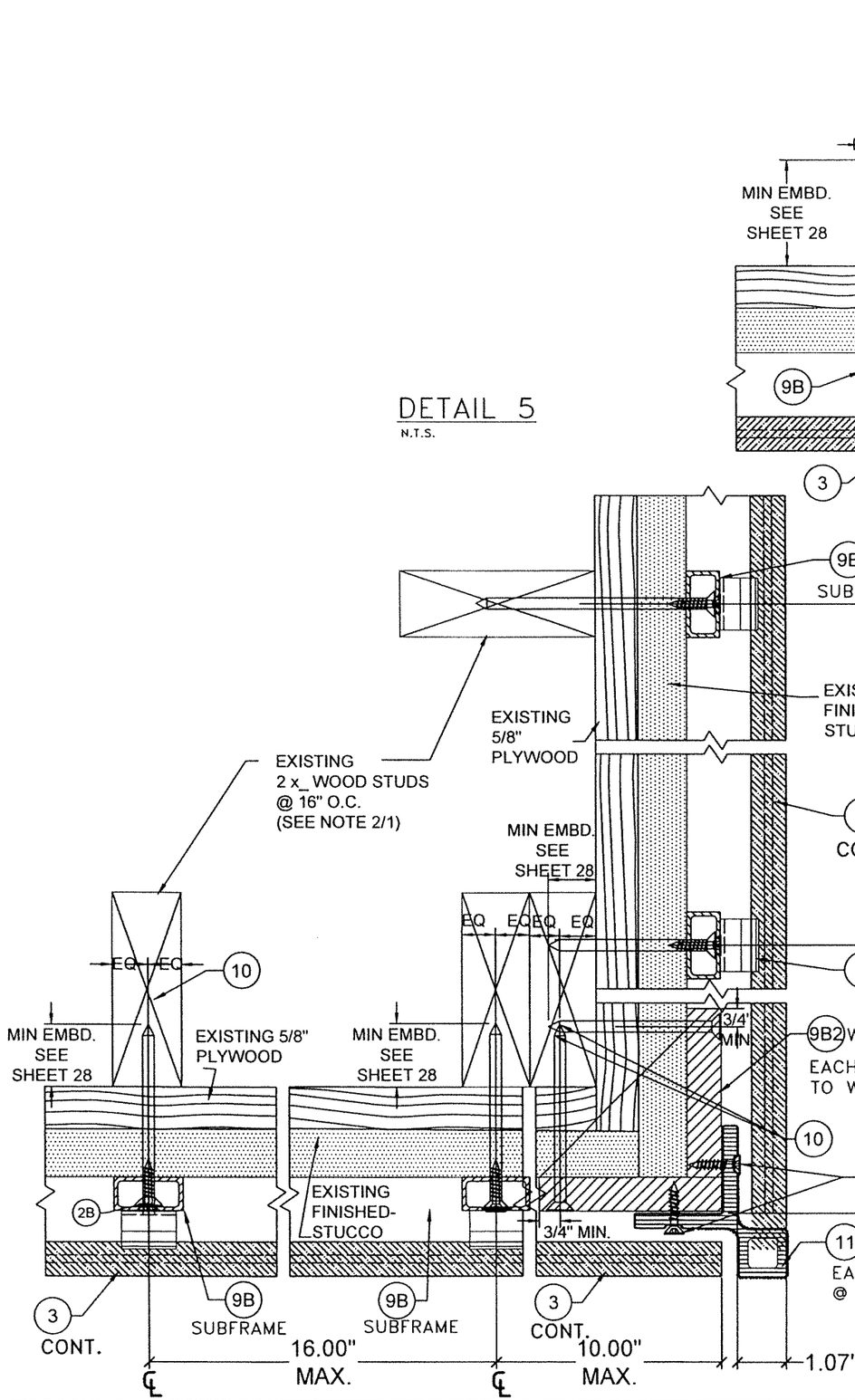

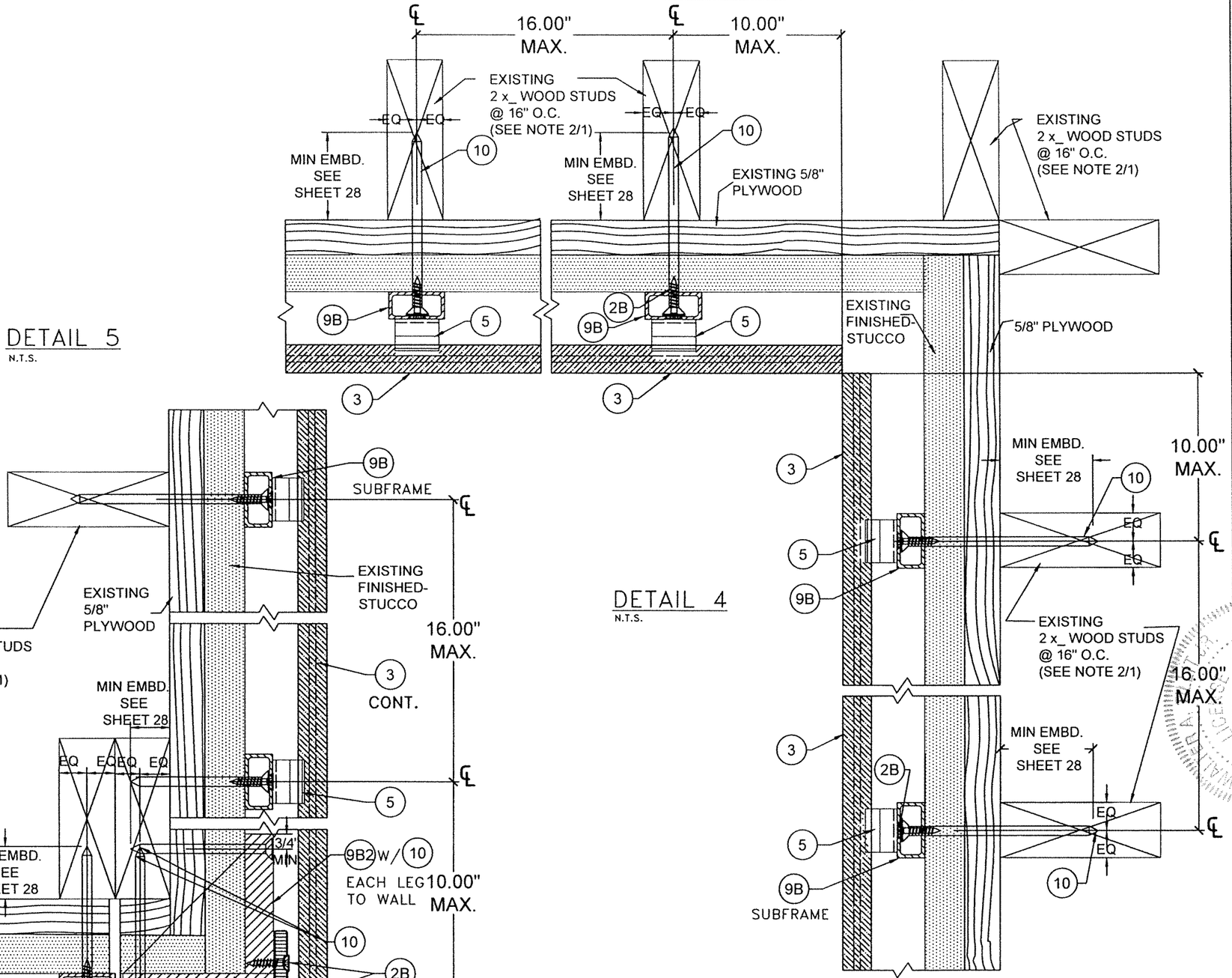

HORIZONTAL INSTALLATION W/ 9B , 9B2
INTERIOR & EXTERIOR CORNER
WOOD FRAME BUILDINGS

FLORIDA BUILDING CODE (HIGH & NON HIGH VELOCITY HURRICANE ZONE)

NEWTECHWOOD DECORATIVE EUROPEAN WALL CLADDING PANEL UH46 SYSTEM

NEWTECHWOOD AMERICA INC.
15912 INTERNATIONAL PLAZA DRIVE,
HOUSTON, TEXAS 77032

REV. NO	DESCRIPTION	DATE	REV. No	DESCRIPTION	DATE
1	OLD 15-465	7/14/23	-	-	-
2	-	-	-	-	-

Y.M. DRAWN BY:
7/14/23 DATE:
23-111 DRAWING No.
SHEET 27 OF 28

©2023 TILTECO, INC.

TILTECO INC.
TILLIT TESTING & ENGINEERING COMPANY
6350 NW. 36th. St., Ste. 320, VIRGINIA GARDENS, FL 33166
Phone : (305)871-1553 Fax : (305)871-1551
CA-0005719
WALTER A. TILLIT Jr. P.E.
FLORIDA Lic. # 44167

STATE OF FLORIDA LICENSED PROFESSIONAL ENGINEER No. 44167

7/14/2023
P.E. SEAL/SIGNATURE/DATE

ANCHOR SCHEDULE

ANCHORING OF COMPONENTS

9A , 9B , 9A1 , 9A2 , 9B1 , 9B2

MAX. DESIGN PRESSURE RATING (psf)	ANCHOR TYPE	SUBSTRATE AT WALL OR CEILING						MAX. SUBSTRATE @ WALL OR CEILING					
		CONCRETE MIN. f'c=3000 psi AT 28 DAYS			CONCRETE BLOCK WALL ASTM C-90			WOOD* (VERTICAL SUBFRAME) MIN. G = 0.55			WOOD** (HORIZONTAL SUBFRAME) MIN. G = 0.55		
		MIN. E.D.	MIN. EMB.	MAX. SPC.	MIN. E.D.	MIN. EMB.	MAX. SPC.	MIN. E.D.	MIN. EMB.	MAX. SPC.	MIN. E.D.	MIN. EMB.	MAX. SPC.
+150,-150	10	1"	1 3/4"	12" O.C.	1"	1 1/4"	6" O.C.	3/4"	1"	12" O.C	–	–	–
+112.5 , -112.5	10	1"	1 3/4"	12" O.C.	1"	1 1/4"	6" O.C.	3/4"	1"	12" O.C	3/4"	1"	16" O.C

NOTE: MIN. E.D. & EMBEDMENT ARE BEYOND ANY FINISH MATERIAL AT EXISTING WALL (SEE NOTE 2/1)

* - VALID ONLY FOR VERTICALLY INSTALLED SUBFRAME

- MUST COINCIDE WITH LOCATION OF EXISTING VERTICAL 2X WOOD STUDS SPACED @ 16" O.C @ EXISTING WALL (SEE NOTE 2/1).
- MAX. 12" O.C INDICATED SPACING IS VERTICAL SPACING ALONG EXISTING STUD'S HEIGHT.
- MIN. 1" EMBEDMENT IS AT EXISTING VERTICAL 2X WOOD STUD BEYOND ANY EXISTING SHEATHING OR WALL FINISH. SHEATHING MUST COMPLY WITH SECTIONS 1626.4(2), 1404.2 OF THE FLORIDA BUILDING CODE.
- FASTENER 10 MUST BE INSTALLED AT MIDWIDTH OF EXISTING VERTICAL 2X STUD.

** VALID ONLY FOR HORIZONTALLY INSTALLED SUBFRAME

- MUST BE ANCHORED AT EXISTING 16" O.C VERTICAL 2X WOOD STUDS @ EXISTING WALL (SEE NOTE 2/1).
- MIN. 1" EMBEDMENT IS AT EXISTING VERTICAL 2X WOOD STUD BEYOND ANY EXITING SHEATHING OR WALL FINISH.
- SHEATHING MUST COMPLY WITH SECTIONS 1626.4(2), 1404.2 OF THE FLORIDA BUILDING CODE.
- FASTENER 10 MUST BE INSTALLED AT MIDWIDTH OF EXISTING VERTICAL 2X STUD.

FLORIDA BUILDING CODE (HIGH & NON HIGH VELOCITY HURRICANE ZONE)

NEWTECHWOOD DECORATIVE EUROPEAN WALL CLADDING PANEL UH46 SYSTEM

NEWTECHWOOD AMERICA INC.
15912 INTERNATIONAL PLAZA DRIVE,
HOUSTON, TEXAS 77032

REV. NO	DESCRIPTION	DATE	REV. No	DESCRIPTION	DATE
1	OLD 13-088	7/14/23	3	-	-
2	-	-	4	-	-

Y.M. DRAWN BY:
7/14/23 DATE:
23-111 DRAWING No.
SHEET 28 OF 28

©2023 TILTECO, INC.

TILTECO INC.
TILLIT TESTING & ENGINEERING COMPANY INC.
6355 N.W. 36th. Street, MIAMI, FLORIDA 33166
Phone: (305)871-1530, Fax: (305)871-1531
CA-0006719
WALTER A. TILLIT Jr. P.E.
FLORIDA Lic. # 44167

WALTER A. TILLIT JR. LICENSE No. 44167 STATE OF FLORIDA PROFESSIONAL ENGINEER

P.E. SEAL/SIGNATURE/DATE